Hanover Outdoor Furniture

IMPORTANT

If you have any problems with this product (missing or damaged parts, assembly issues, etc.),

PLEASE DO NOT RETURN TO THE RETAILER/STORE

from where you purchased the product.

Please call our Toll-Free Customer Service Hotline at: **1-800-416-3511**

Between 9:00 AM and 5:00 PM Eastern Time, Monday through Friday

Or visit our website at: **www.hanover-products.com**

To expedite any future warranty claims, please retain the Instruction Sheet, Warranty Card and receipt for future use.

For additional on-line support on assembly, troubleshooting and care & maintenance of your outdoor furniture, please visit our website at: **www.hanover-products.com**.

6/1/2015 (a)

Outdoor Furniture

1-Year Limited Warranty Program

For a period of one (1) year after purchase, the Manufacturer will either repair or replace defective components in accordance with this Limited Warranty. This warranty is between Manufacturer and the original purchaser and is valid only when accompanied by the original purchaser's sales receipt showing original date of purchase and location of purchase. Replacements under this warranty revert back to the date of original purchase for future warranty.

Manufacturer or its authorized dealer can accept or reject warranty claims based on its findings. This warranty applies in normal residential use only and is not intended for commercial use. Manufacturer can make substitutions as required of materials, components, and sub-components of comparable value and utility. This warranty is limited to product repair or replacement (to be determined solely by Manufacturer). Warranty return is limited to only the single affected component.

This warranty covers only manufacturing defects and does not cover normal wear and tear, damage due to acts of nature (such as, but not limited to freezing or high winds), abuse or misuse, including chemical damage from suntan oil or other chemicals, exposure to extreme heat or cold, abrasion or excessive weight. This product is intended to be used in standard installations only. This warranty is invalid if the product is not used for intended purpose. Manufacturer disclaims liability for any aspect of installation and any inconvenience caused by a defective part of a component.

Certain items are not covered by this warranty. These include, but are not limited to the following:

1. Components subjected to abuse, including abuse intended to simulate failure.
2. Damages caused by retailer, shipper or installation crew (such as scratches, dents, tears, chips, etc.).
3. Any part which merely exhibits normal wear yet functions essentially as new, including chips, scratches or stretching of materials and stitching.
4. Tears, punctures, scratches or any damage caused by improper installation or use.
5. Damage to frames/welds resulting from improper assembly or exposure to water and/or sub-freezing temperatures is not covered. General frame rusting is not covered.
6. Fading and/or discoloration of fabrics/cushions/straps/wicker resulting from exposure to the elements, chemicals, oils, fluids or any other cause are not covered.
7. Umbrella bases are not covered under any circumstances.
8. Items sold "as is" or floor models.

To make a claim, call the toll-free number below. Please have available a copy of the original sales receipt along with a brief description of the problem. Please also provide your email address and daytime telephone or cell phone #. Repairs or replacement will be made at the Manufacturer's option. *Sales and use taxes, plus shipping and handling charges are the responsibility of the consumer.*

THIS IS THE ENTIRE EXCLUSIVE EXPRESS LIMITED LIABILITY. THE MANUFACTURER NEITHER MAKES NOR IS RESPONSIBLE FOR ANY OTHER WARRANTIES, EITHER EXPRESS OR IMPLIED, INCLUDING THOSE OF RETAILING DEALERS. THIS EXCLUSIVE REMEDY IS LIMITED TO RECEIPT OF A CREDIT IN CONNECTION WITH THE REPAIR OR REPLACEMENT OF ANY PRODUCT OR COMPONENT DEEMED TO BE DEFECTIVE UNDER THE TERMS AND CONDITIONS AS STATED IN THIS WARRANTY. NEITHER THE PRODUCT MANUFACTURER NOR ITS AGENTS SHALL BE LIABLE IN ANY CASE FOR INCIDENTAL, INDIRECT, SPECIAL OR CONSEQUENTIAL DAMAGES RESULTING FROM THE USE OF THIS PRODUCT OR ARISING OUT OF ANY BREACH OF THIS WARRANTY OR NEGLIGENCE EVEN IF IT HAS BEEN ADVISED OF THE POSSIBILITY OF SUCH DAMAGES. EXCEPT AS OTHERWISE MAY BE REQUIRED BY LAW, THERE ARE NO OTHER EXPRESS OR IMPLIED WARRANTIES OTHER THAN THE WARRANTY DESCRIBED HEREIN, AND ALL OTHER WARRANTIES, INCLUDING ANY IMPLIED WARRANTY OF

Contact Warranty Services at 1-800-416-3511

Care & Maintenance

Outdoor furniture can be enjoyed for many years when well maintained.

Regular Maintenance
Wash the furniture with a solution of mild detergent and water, rinse with clear water, and dry thoroughly. To all metal frames, apply a fine, clear automobile wax for maximum protection against harmful ultraviolet exposure and salt air.

For best protection, perform this maintenance two or three times per year in low pollution areas or more frequently in high pollution areas. Please note that these durable materials can be safely cleaned as often as desired. Note: Some suntan and sun block products may be harmful to resin, cushions and strap, mesh and vinyl lace and strap. Do not allow such products to come in contact with any seating surfaces to avoid deep penetrating stains, which are not covered under warranty.

How to Clean & Care for Teak Furnishings
Left alone to age, the natural color of teak furnishings will weather to a soft, silver grey. This process will take approximately nine months, depending on the degree of sunlight and rain exposure. Imperfections, which are inherent properties of the wood, will show over time, enhancing the beauty of the furniture. In humid or wet climates, or after rains, the wood may naturally expand and contract, causing the grain to rise. This is to be expected with exposure to the elements and will stabilize after the initial weathering occurs.
To maintain teak furnishings, use a soft bristled utility brush and stroke lightly in the direction of the grain to remove surface dust. For more stubborn dirt, the wood may be washed with a mild solution of four parts laundry detergent or dish washing soap to one part bleach in water, then rinsed thoroughly and allowed to dry completely. Oiling the wood may cause mildew or irregular coloring.

How to Clean Woven Furnishings
Woven furnishings are made of durable and weatherproof extruded polyethylene resin weave. Light stains and soils may be removed with a solution of mild detergent and water, rinsed with clear water and dried thoroughly. Mildew and heavy stains can be removed with a quality commercial outdoor furniture cleaner and protectant. Woven furnishings may not be suitable for intensely hot climates.

How to Clean Fabric
Fine outdoor fabrics are designed to endure years of sun, soil and moisture. Wash outdoor cushions with a solution of mild detergent and water and thoroughly rinse with clear water. Stand cushions on end and allow to air dry completely. Light stains can be removed as above. Mildew and heavy stains can be removed with a quality commercial outdoor furniture cleaner and protectant. Note: Do not dry clean or use a washing machine or dryer. Do not steam or use water at temperatures above 100º F when washing. Note: Be careful to keep the outdoor furniture cleaner from contact with the cushions of your outdoor furniture, as it will cause discoloration. Do not use bleach on printed acrylic fabrics. Do not use solvent-type materials on woven vinyl, woven blend or ultra woven blend fabrics as they will damage the yarns. Do not use chlorine based cleaners.

How to Clean Mesh
Remove light stains with a solution of mild detergent and water, then rinse with clear water and dry thoroughly. Mildew and heavy stains can be removed with a quality commercial outdoor furniture cleaner and protectant.

How to Clean Strap
For general or light cleaning, begin by brushing dirt off the strap. Apply a solution of mild detergent and warm water and allow it to soak into the strap. Gently clean with a sponge or soft bristle brush, then rinse thoroughly with clear water and allow the strap to air dry.

How to Clean Vinyl Strap
Apply a quality vinyl protectant to guard against the effects of air pollution, salt air build-up, and mildew. To remove difficult stains use rubbing alcohol applied with a soft cloth.

How to Clean & Care for Stone and Marble Tops
Tabletops are designed for normal outdoor use in residential settings. To maintain the natural beauty we recommend resealing your table top when necessary, with the same sealer product applied during the manufacturing process. The sealer penetrates the stone and acts as a repellent, preventing absorption of moisture and stainable materials.

If tabletop is stained with products such as wine, soda, coffee, or other colorants of organic origin, clean these spills immediately with a mild detergent then rinse with water. In extreme cold climates, it is recommended that tabletops be stored in a dry indoor area or be covered with suitable outdoor furniture cover. Be sure to allow space between the tabletop and the cover so that moisture does not collect on the table; this will promote airflow and allow moisture to escape.

ASSEMBLY INSTRUCTIONS

1 Attach the seat frame to the left chair frame by using three 1/4"x48 mm bolts and washers as shown in **Fig.1**. Guide bolts through holes in the seat frame and left chair frame, add a nut with washer to each bolt. **Hand tighten only.** Repeat for the right chair frame.

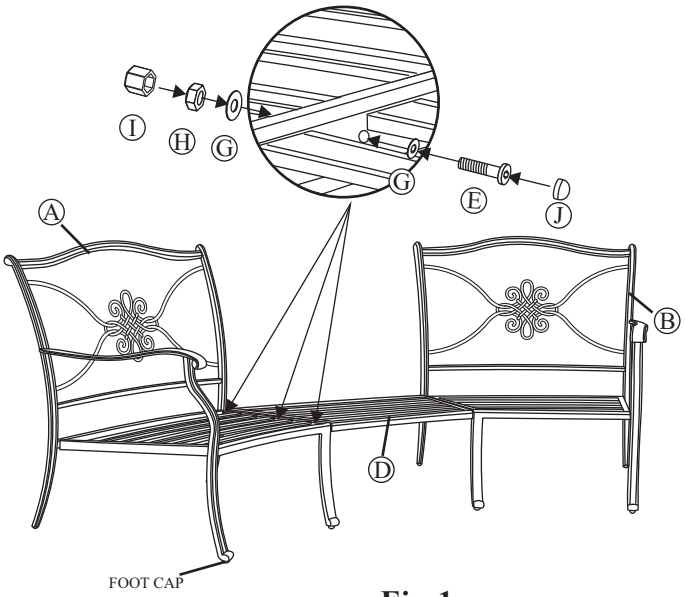

Fig.1

2 Attach the back frame to the left chair frame by using two 1/4"x68 mm bolts and washers as shown in **Fig.2**. Guide bolts through holes in the back frame and left chair frame, add a nut with washer to each bolt. **Hand tighten only.** Repeat for the right chair frame.

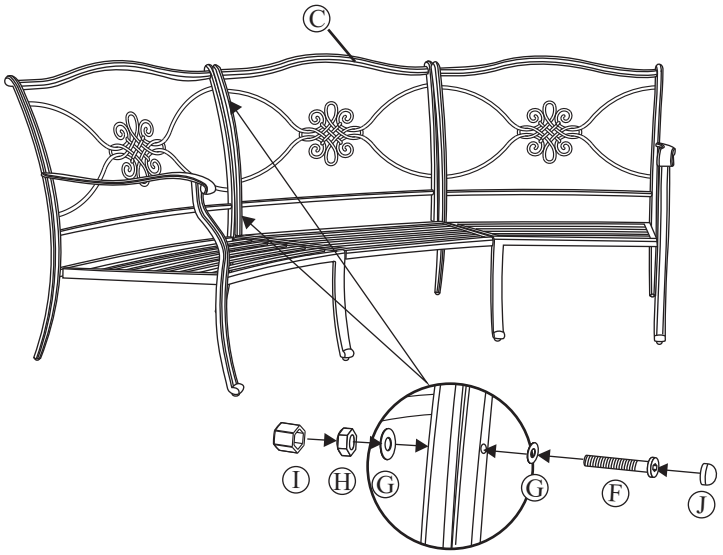

Fig.2

3 After making any necessary adjustments to the alignment of the frames, use the hex bolt driver and hex wrench to tighten all nuts and bolts. **Do not over tighten**. Over tightening may strip bolts. Cover all nuts and bolts with covers. Your sectional sofa is now ready for use.

PARTS IDENTIFICATION LIST

** NOTE: PARTS SHOWN ON PARTS LIST ARE NOT TO SCALE*

	PART LIST	DESCRIPTION	ORDER PART #	QTY
A		LEFT CHAIR FRAME		1
B		RIGHT CHAIR FRAME		1
C		BACK FRAME		1
D		SEAT FRAME		1
E		1/4" X 48 MM BOLT	HW0274	6
F		1/4" X 68 MM BOLT	HW0447	4
G		Ø6.5 X 1.0 MM WASHER	HW0004	20
H		1/4" NUT	HW0014	10
I		NUT COVER	HW0027	10
J		BOLT COVER	HW0105	10
K		HEX WRENCH	HW0009	1
L		HEX BOLT DRIVER	HW0006	1
		FOOT CAP *FACTORY ASSEMBLY*	FC0030	

ACL00106

ASSEMBLY INSTRUCTIONS

CSA Model 99000

ARL00100

Installer: Leave these instructions with consumer.

Consumer: Keep these instructions for future reference.

DANGER

If you smell gas:

1. **Shut off gas to the appliance.**
2. **Extinguish any open flame.**
3. **If odor continues, keep away from the appliance and immediately call your gas supplier or fire department.**

WARNING:

Improper installation, adjustment alteration, service or maintenance can cause injury or property damage. Read the installation, operating and maintenance instructions thoroughly before installing or servicing this equipment.

WARNING

Do not store or use gasoline or other flammable vapors and liquids in the vicinity of this or any other appliance.

An LP-cylinder not connected for use shall not be stored in the vicinity of this or any other appliance.

WARNING: For Outdoor Use Only

FOR USE WITH 20LB (9KG) PROPANE CYLINDER WITH TYPE 1 CONNECTION OR FOR USE WITH NATURAL GAS AFTER CONVERSION KIT IS INSTALLED (MUST BE PROFESSIONALLY INSTALLED) ALSO THE LP REGULATOR MUST BE SUPPLIED BY THE MANUFACTURER.

⚠DANGER	CARBON MONOXIDE HAZARD
	This appliance can produce carbon monoxide which has no odor. **Using it in an enclosed space can kill you.** **Never use this appliance in an enclosed space such as a camper, tent, car or home.**

WARNING:
USE FACTORY APPROVED REPLACEMENT PARTS AND ACCESSORIES ONLY. USE OF UNAPPROVED PART OR ACCESSORIES CAN VOID THE WARRANTY ON THIS PRODUCT AND RESULT IN AHAZARDOUS CONDITION. PLEASE CONTACT US FOR INFORMATION REGARDING REPLACEMNT HOSES,THERMOCOUPLES, ELECTRODES,IGNITION MODULES,LAVAROCKS,LOGS, FIRE ICE, ETC.

Questions, Problems, Missing Parts? Before returning to your retailer, call our customer service department in the US and Canada at 1-800-416-3511, Monday-Friday, 9 a.m.–5 p.m. Eastern Time.

Dec 2014

IMPORTANT SAFETY INFORMATION

The installation must conform with local codes or, in the absence of local codes, with the National Fuel Gas Code, ANSI Z223.1/NFPA 54; International Fuel Gas Code. ; Natural Gas and Propane Installation Code, CSA B149.1; or Propane Storage and Handling Code, B149.2, as applicable.

The appliance must be isolated from the gas supply piping system by closing its equipment shutoff valve during any pressure testing of the gas supply system at test pressure equal to or less than 1/2 psi (3.5kPa).

The appliance area must be kept clear and free from combustible materials, gasoline and other flammable vapors and liquids.

Do not use this appliance if any part has been under water. Immediately call a qualified service technician to inspect the appliance and to replace any part of the control system and any gas control which has been under water.

Children and adults should be alerted to the hazards of high surface temperatures and kept at a safe distance to avoid burns or clothing ignition.

Young children should be carefully supervised when they are anywhere near the appliance.

Clothing or other flammable material should not be hung from the appliance, or placed on or near the appliance.

Any screen or guard removed for servicing an appliance must be replaced prior to operating the appliance.

Installation and repair should be done by a qualified service person. The appliance should be inspected before use and at least annually by a professional service person. More frequent cleaning may be required as necessary. It is imperative that the control compartments, burners and circulating air passageways of the appliance be kept clean.

Do NOT burn solid fuels in this gas fireplace.

CAUTION: The propane gas pressure regulator provided with this appliance must be used. This regulator is set for an outlet pressure of 11 inches water column.

This outdoor gas appliance is not intended to be installed in or on recreational vehicles and/or boats.

Before each use of this gas appliance, open the LP (Liquid Propane) Tank Drawer and inspect the LP Hose. If there is evidence of excessive abrasion or wear, or the hose is cut, it must be replaced prior to the gas appliance being put into operation. Use only the replacement hose assembly specified in this manual. Inspect the burner before each use of the appliance. The burner must be replaced prior to the appliance being put into operation if it is evident that the burner is damaged. Use only the burner listed in these instructions.

Keep the fuel supply hose away from any heated surfaces.

IMPORTANT SAFETY INFORMATION ABOUT

PROPANE (LP) GAS

A self contained LP-gas cylinder for use with this appliance must have a capacity of 20 lbs. and must be equipped with a Type 1 connector and an OPD (overfill protection device). See Figure 1.

The LP-gas supply cylinder to be used must be constructed and marked in accordance with the specification for LP-gas cylinders of the U.S. Department of Transportation (DOT) or the National Standard of Canada, *CAN/CSA-B339, Cylinder, Sphere and Tubes for the Transportation of Dangerous Goods*.

- The cylinder supply system must be arranged for vapor withdrawal.
- The cylinder used must include a collar to protect the cylinder valve.
- This appliance shall be used only outdoors in a well-ventilated space and shall not be used in a building, garage or any other enclosed space.
- When this appliance is not is use, the gas must be turned off at the supply cylinder.
- Storage of this appliance indoors is permissible only if the cylinder is disconnected and removed from the appliance.
- Cylinders must be stored outdoors in a well-ventilated area out of the reach of children .Disconnected cylinders must have threaded valve plugs tightly installed and must not be stored in a building, garage or any other enclosed areas.

CSA (Canadian Standards Association) certified to ANSI Z21.97•CSA 2.41-2012 “ Outdoor Decorative Gas Appliances”

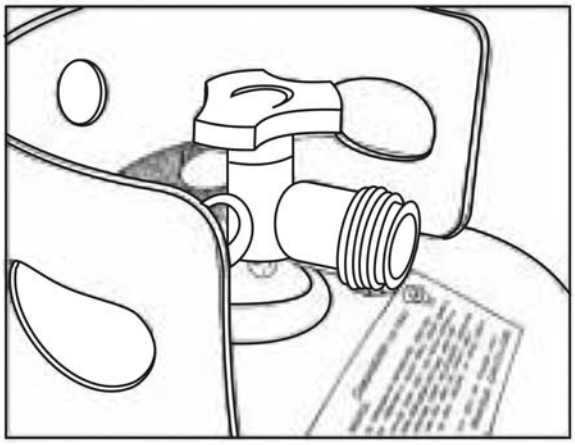

Figure 1

SPECIFICATIONS

INPUT	40,000 Btu/hr	30,000 Btu/hr Low fire
Propane Regulator Pressure	11 inches water column	
Clearances to combustible surfaces	Sides 24in./61cm	Top: 72 in. / 183 cm

PARTS IDENTIFICATION LIST

	PART	DESCRIPTION	PART#	QTY
A		CONTROL KNOB	FP1245	1
B		GAS VALVE	FP0307	1
C		THERMOCOUPLE	FP0004	1
D		LP REGULATOR HOSE	65-FP-0181	1
E		ELECTRODE	65-FP-0128	1
F		ORIFICE ELBOW	FP0310	1
G		IGNITION MODULE	FP0006	1
H		PROPANE ORIFICE	ZCF0021	1
I		“AAA” BATTERY(1.5V)	HW0705	1
J		LAVA ROCK SET	FP0002	1
K		FOOTCAP	FC0559	4
L		1/4" X 15 MM BOLT	HW0034	8
M		1/4" X 20 MM BOLT	HW0036	4
N		1/4" X 40 MM BOLT	HW0086	4
O		BOLT COVER	HW0105	18
P		Ø6.5 X 1.0 MM WASHER	HW0004	14
Q		Ø18XØ6.5 X1.5MM WASHER	HW0103	4
R		NUTS	HW0717	2
S		HEX BOLT DRIVER	HW0006	1
T		HEX WRENCH	HW0008	1

U	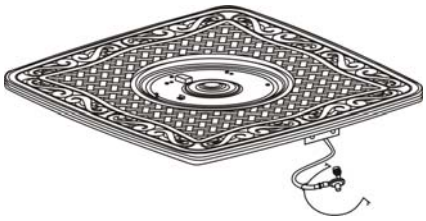	FIREPIT TABLE TOP		1
V	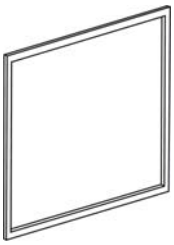	BACK PANEL		1
W	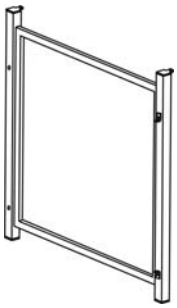	LEFT SIDE PANEL		1
X	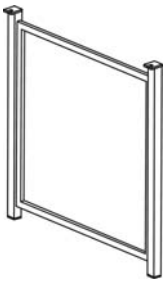	RIGHT SIDE PANEL		1
Y		DOOR PANEL		1
Z		MIDDLE SUPPORT		1
AA		LP SUPPORT		1
BB		BOTTOM/ TOP CONNECTOR		1

INSTALLATION

1.Identify parts packed in carton against the parts list. Remove all protective materials and set parts on a flat, non-abrasive surface.

2. Attach the back panel to the side panels by using four 1/4"x40 mm bolts and washers as shown in Figure 2.Guide the bolts through the holes in back panel, into the pre-drilled holes in the side panels. **Hand tighten only.**

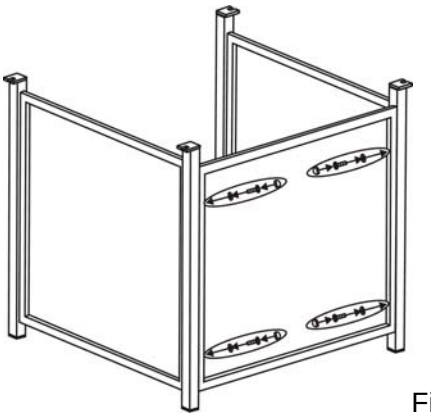

Figure 2

3. Attach the middle support to the side panels by using four 1/4"x15 mm bolts and washers as shown in Figure 3.Guide the bolts through the holes in the middle support, into the pre-drilled holes in the side panels. **Hand tighten only.**

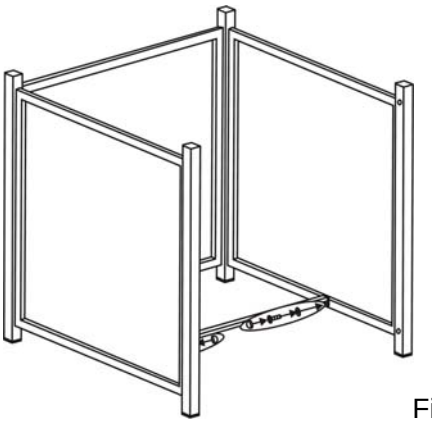

Figure 3

4. Attach the "L" connector to right side panel by using a 1/4"x15 mm bolt and washer as shown in Figure 4.Guide the bolt through the hole in the "L" connector, into the pre-drilled hole in the right side panel. **Do not over tighten.**

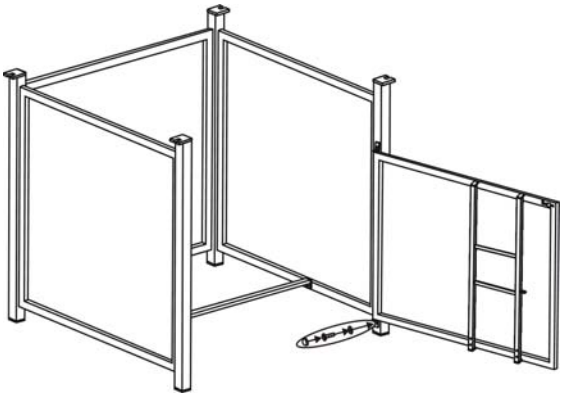

Figure 4

5. Put the door onto the bottom connector, guide the pin in the bottom connector into the hole on the underside of the door. Then guide the pin on the top connector into the hole in the topside of the door, use a 1/4"x15 mm bolt and washer to attach this top connector to the right side panel as shown in Figure 5. **Do not over tighten.**

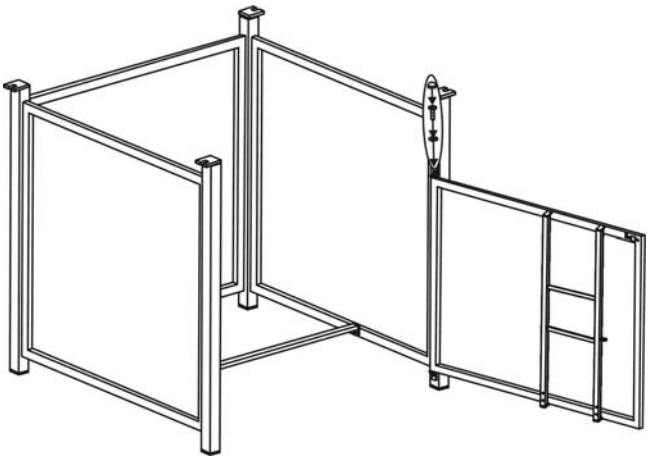

Figure 5

6. With the help of another person, carefully place the table top onto the table base. After making any necessary adjustments to the alignment of the table top and the assembled base, use four 1/4"x20 mm bolts and washers as shown in Figure 6.Guide the bolts through the holes in the base, into the pre drilled holes in the table top. **Do not tighten completely.**

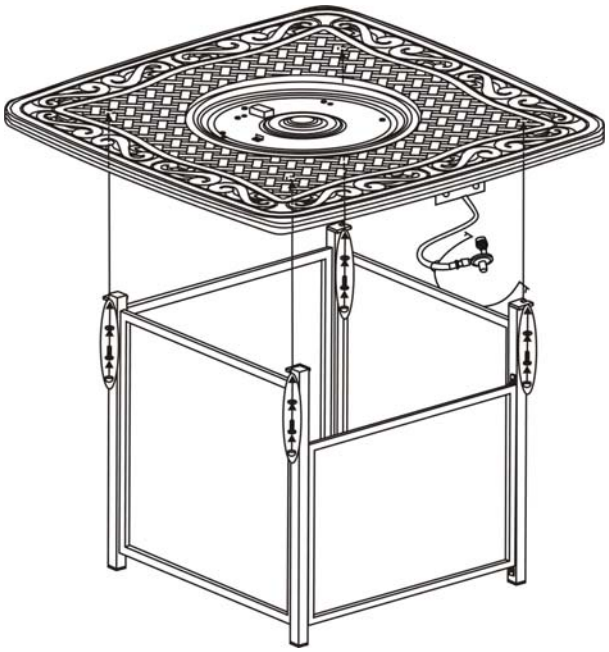

Figure 6

7. Attach the LP support the to door panel by using four 1/4"x15 mm bolts and washers as shown in Figure 7. **Do not over tighten.**

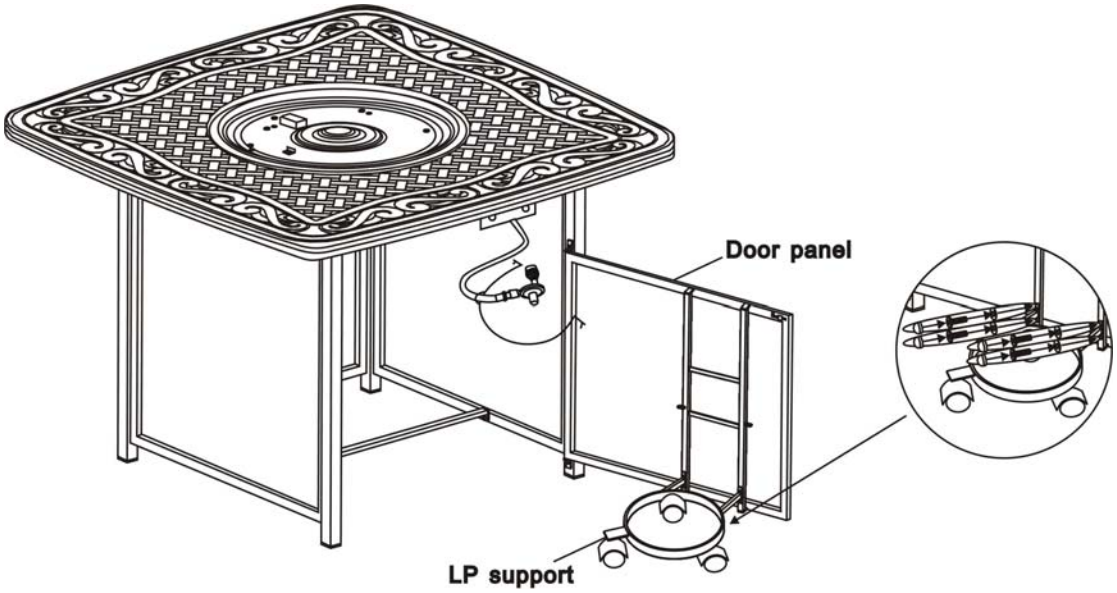

Figure 7

8. Place gas tank onto the LP support as shown in Figure 8.

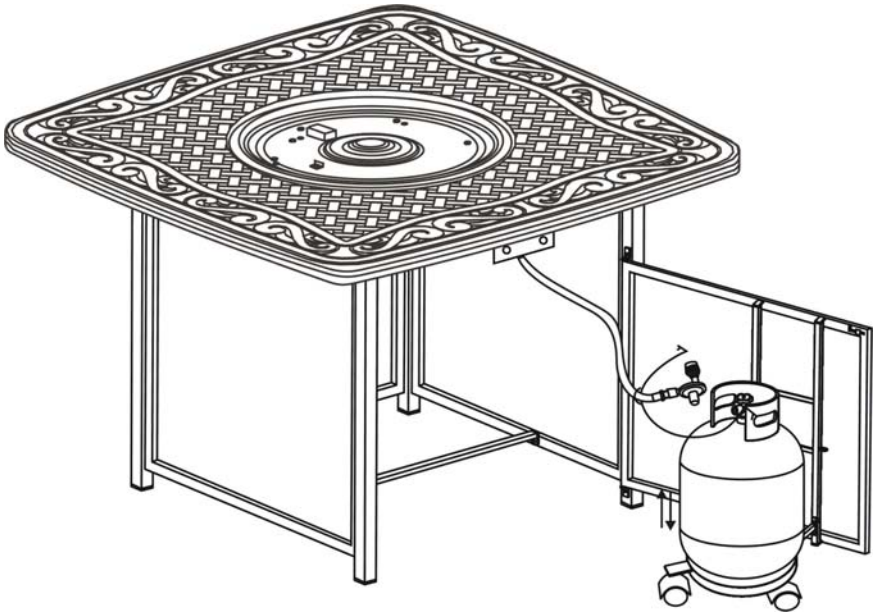

Figure 8

9. Attach the metal ring (as shown in Figure 9) pre-fitted with gas hose which is connected to the table top , into the hole of the door panel, then use hex bolt driver to screw 1/4"x5mm nut , the gas tank has fixed as shown in Figure 9a. Connect the regulator as shown in Figure.10 Screw the black handle clock-wise to tighten. Turn the handle counter clock-wise to remove. The hose must point down. Check that the valve is turned all the way clockwise to the "OFF" position.

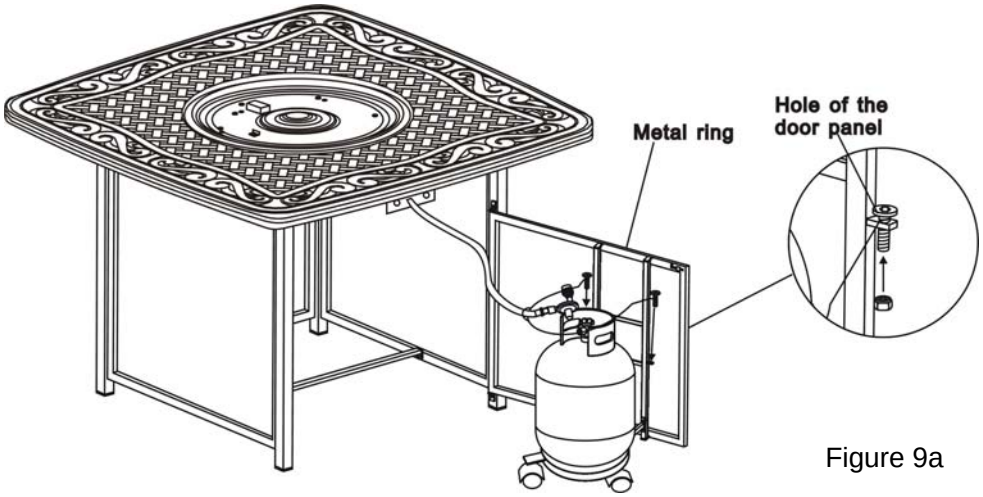

Figure 9a

Figure 9

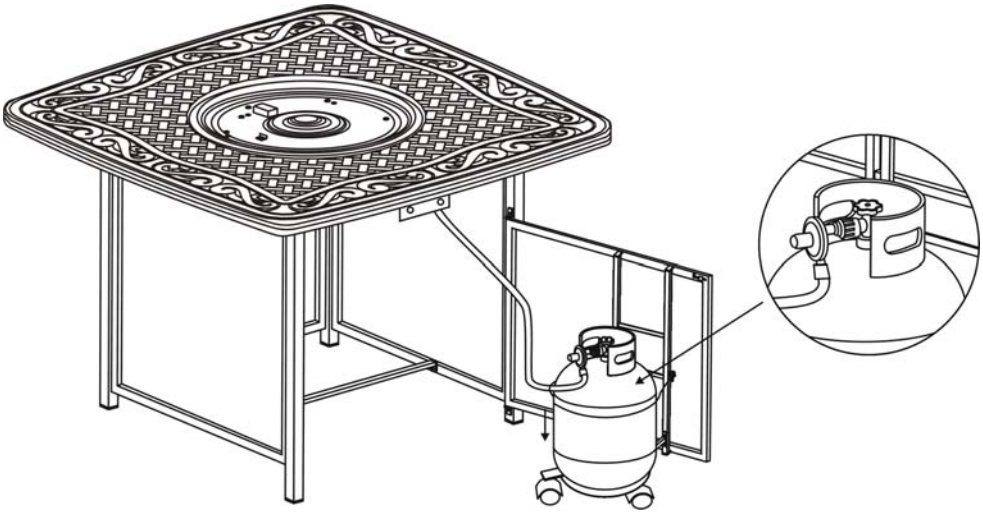

Figure 10

10. After making any necessary adjustments to the parts, use the hex bolt driver to tighten all bolts.
Note: each bolt must be tightened a few revolutions at a time.
Repeat until all bolts are tight. Do not over tighten. Over tightening may strip bolts. Cover all bolts with covers.

12. Pour the lava rocks into the burner pan completely covering the burner. See Figure 11.

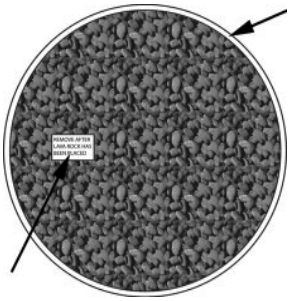

Ignition Well

Figure 11

13. Remove the cardboard cover from the ignition well as shown in Figure 12. Remove any lava rock or fire ice on top of ignition well.

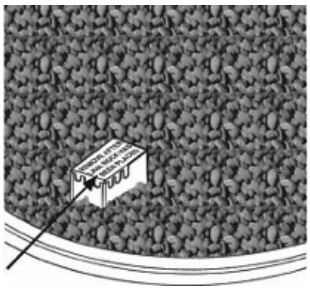

Cardboard Cover

Figure 12

14. Open the tank valve. Apply a solution of soapy water to the tank-regulator connection and to the valve-hose connection to check for leaks as shown in Figure 13. If soap bubbles continue to form, the connection has a leak. If a leak is found, close the tank valve and tighten all connections.

NOTE: NEVER USE A FLAME TO CHECK FOR LEAKS.

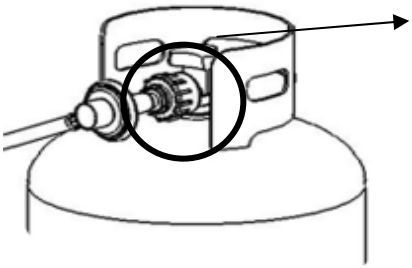

Checking the tank-regulator for leaks

Figure 13

BATTERIES

Make sure the control knob is in the "OFF" position. Unscrew the push button cap on the ignition module located on the control panel to access the battery compartment. The ignition module requires one Alkaline AAA size battery (1.5V). The negative (-) end goes in first. See Figure 14. Dispose of battery safely. May explode or leak if charged or disposed of in fire. Make sure of the polarity. Mercury and cadmium free.

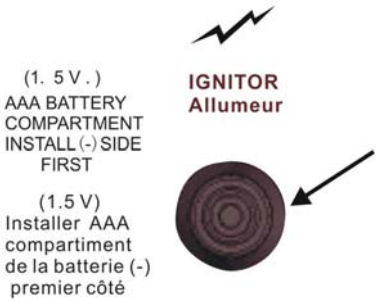

Figure 14

LIGHTING INSTRUCTIONS

Warning: If these instructions are not followed exactly, a fire or explosion may result causing property damage, personal injury or loss of life.

1. Make sure the control knob is in the "OFF" position. See Figure 15 Open the tank valve all the way.

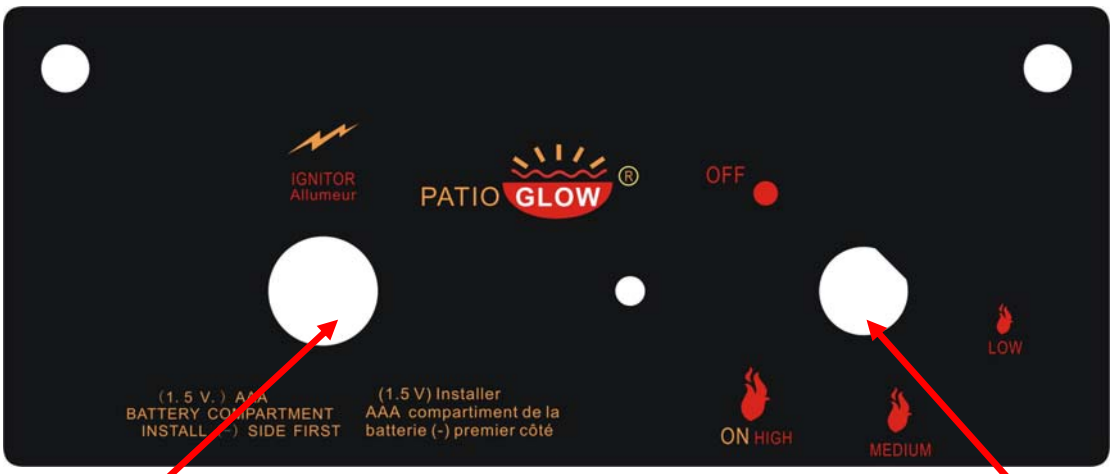

IGNITER BUTTON

Figure 15

CONTROL KNOB

2. Push in the igniter button. You will hear a slight clicking sound. With the igniter button pushed in, push and turn the control knob to the “ON” position. the fire should light within a few seconds. Once the flame is lit, release the igniter button and continue to hold the control knob in for 10 to 15 seconds. Release the control knob. The control knob should pop back out and then remain lit.

Note: If the fire does not light, turn the knob to the “OFF” position and wait five (5) minutes before trying again.

3. To turn down the flame, push the control knob in slightly and turn to Medium (medium or Low (small flame).

4. To shut down the fire pit, turn the control knob to the “OFF” position and turn off the tank valve.

MAINTENANCE

The flames should look like those in Figure 16. To clean the burner, use a soft brush after the burner has cooled completely. Never use a vacuum cleaner on the burner. It is recommended that the fire pit be stored indoors during the winter if it will be subjected to freezing temperatures. The LP cylinder must be disconnected and removed from the appliance before the appliance can be stored indoors.

Figure 16

TROUBLESHOOTING GUIDE

PROBLEM	CAUSE	REMEDY
Burner won’t light	No Propane Gas at Burner	Check that gas tank valve is open. Turn control knob to “ON” and push control knob in. Make sure tank has propane gas.
	No Spark at Electrode	Check that AAA battery is installed with negative (-) end first and has a charge. Check that the wire is connected to the ignition module. Check that the electrode is not cracked or broken.
	Lack of oxygen	Remove excess lava rocks or fire ices from around the ignition well.
Burner won’t stay lit after lighting	Thermocouple not in flame	Check that the tip of the thermocouple is even with the top of the ignition well. Remove any lava rocks from the igntion well.
	Thermocouple connection at the main control valve is loose	Tighten the thermocouple nut at the back of the valve.
	No Lava Rocks on Burner	Cover the burner with lava rocks per the instructions