SPEAKMAN® SM-11400-P

Tiber™ Pressure Balance Valve with Diverter and Trim

FEATURES
VALVE:

- Anti-scald pressure balance valve
- Built-in check valves
- Pressure balancing and ceramic temperature regulating cartridge
- Adjustable temperature limit stop
- Integral stops
- 1/2" NPT female tub outlet
- 1/2" sweat shower outlet
- 1/2" sweat inlets
- Diverter handle allows for transfer between two water outlets

TRIM:

- Modern rounded square styling
- Mounting plate with seal
- Metal handles
- Durable plastic trim plate

FINISH:

PC

BN

COMPLIANCE:

- ASME A112.18.1/CSA B125.1 certified
- Meets ASSE 1016

WARRANTY:

- 1 Year Limited

Architect/Engineer Approval Space:

SPEAKMAN
400 ANCHOR MILL ROAD
NEW CASTLE, DE 19720

P: 800-537-2107
F: 800-977-2747
W: WWW.SPEAKMAN.COM
R: OCTOBER 2017

Management Systems Registered to ISO 9001

DIMENSIONS:

NOTE: 1. All dimensions are in inches (millimeters) unless otherwise specified and are subject to change without notice. 2. Unless otherwise specified, all inlets and outlets are 1/2" female copper sweat. 3. For ADA mounting locations, consult ADAAG, ANSI A117.1, or static regulations. Contractor pack valves & trim kits available.

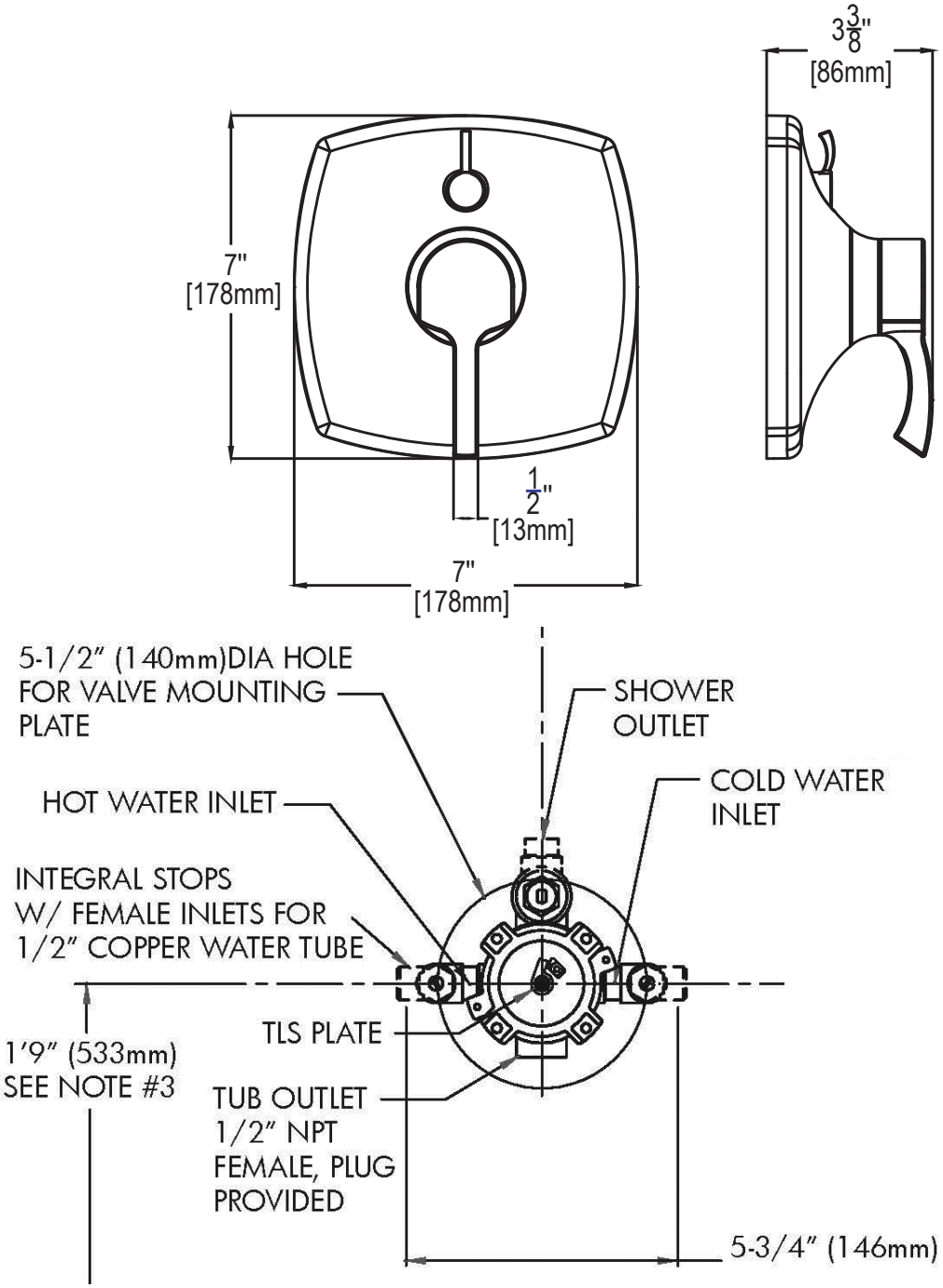

Architect/Engineer Approval Space:

SPEAKMAN
400 ANCHOR MILL ROAD
NEW CASTLE, DE 19720

P: 800-537-2107
F: 800-977-2747
W: WWW.SPEAKMAN.COM
R: OCTOBER 2017