POLARIS | SINKS

Technical Specifications

P208M

Double Equal Bowl AstraGranite Kitchen Sink

The AstraGranite P208M equal double bowl undermount sink is made from a granite composite material that is comprised of 80% Quartz and 20% Acrylic. The non-porous finish of our AstraGranite sinks gives it anti-bacterial properties. Aside from being anti-bacterial, the P208M is stain and scratch resistant and can resist heat up to 550 degrees. The overall dimensions of the sink are 32 1/2" x 18 5/8" x 9 1/2" and a 33" minimum cabinet size is required. The sink contains a 3 1/2" offset drain and is available in multiple colors. As always, our AstraGranite sinks are covered under a limited lifetime warranty for as long as you own the sink.

Tech Specs

- Undermount Installation
- Made with 80% Quartz, 20% Acrylic
- All-Natural Materials - Eco-Friendly and Recyclable
- Offset Drain
- Heat Resistant to 550 Degrees
- Stain Resistant
- Scratch Resistant
- Multiple Colors Available
- Installation Hardware Included
- Lifetime Warranty
- Acrylic Provides Sound Dampening - No Pads Needed

Dimensions

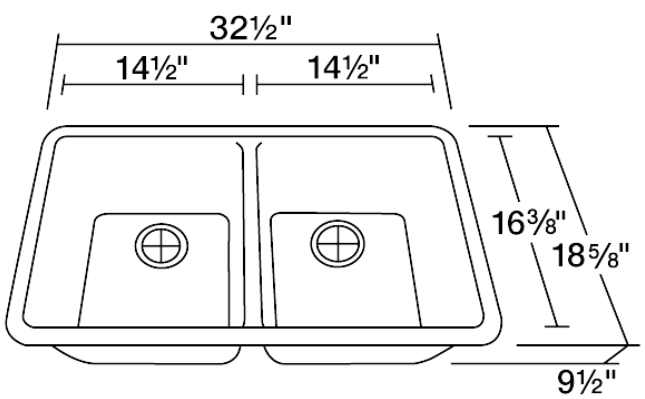

Accessories Available

Multiple Colors Available

Available in Beige, Black, Mocha, Silver, Slate, and White.

Polaris Sinks © 2019

www.polarissinks.com
sales@polarissinks.com