hansgrohe

Metropol Classic
Widespread Faucet 110 with Cross Handles and Pop-Up Drain, 1.2 GPM
Finishes : **chrome** Part no. : **31306001**

Description

Features

- Aerated spray
- Flow: 1.2 GPM (4.5 L/Min)
- 90° ceramic valves
- Includes pop-up drain

Technology

Product image
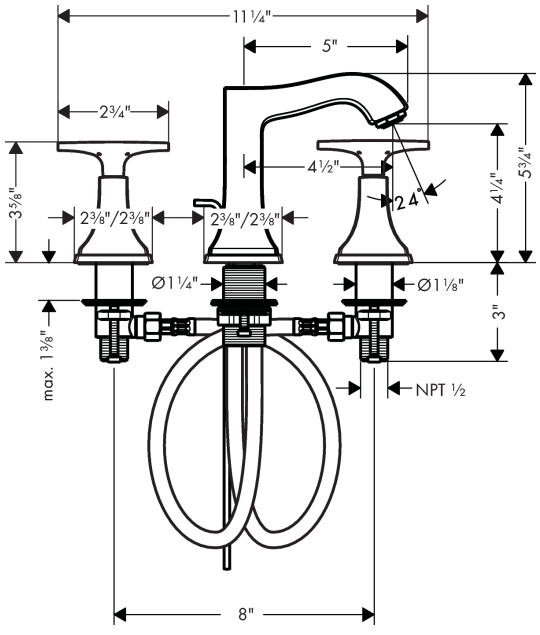
Scale drawing