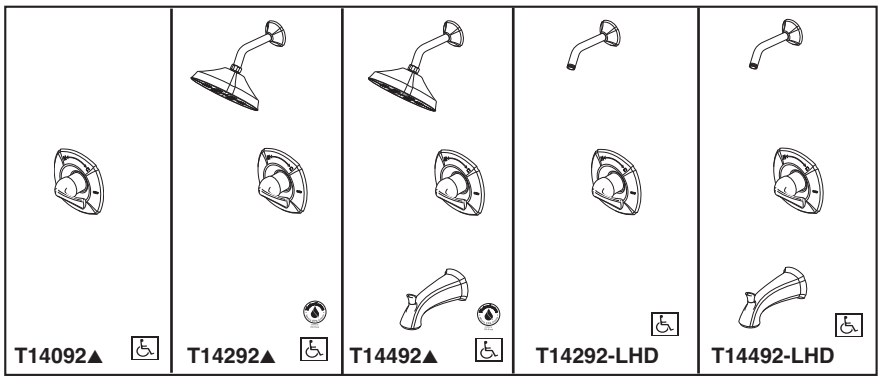

Submitted Model No.:_____

Specific Features:_____

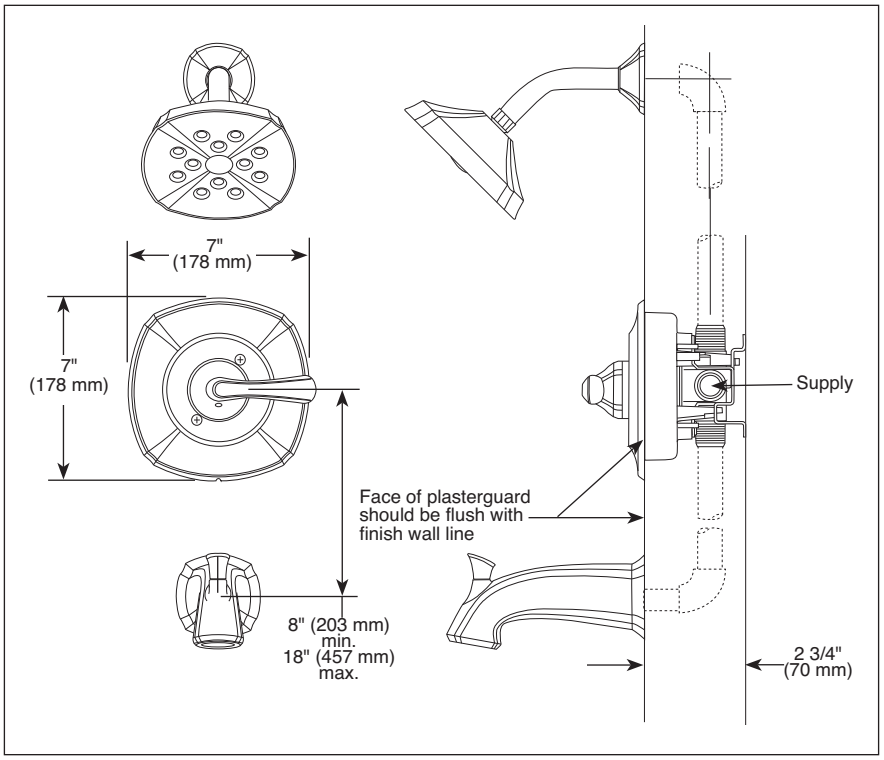

▲ Designate Proper Finish Suffix

RP61269▲ (Pull-Up Diverter)

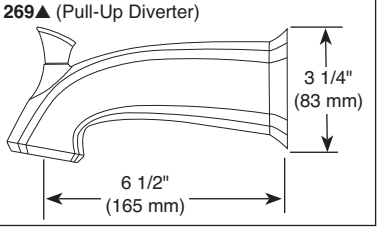

RP54863▲ (Non Diverter)

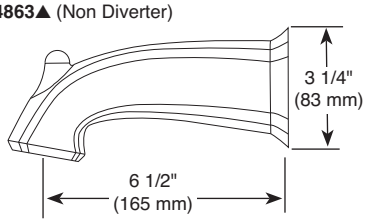

RP61265▲ H_2O Kinetic Technology® Raincan Showerhead

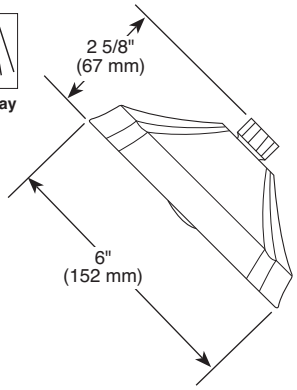

RP77991 Available Extension Kit

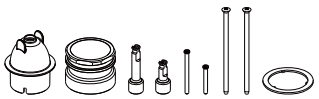

Delta reserves the right (1) to make changes in specifications and materials, and (2) to change or discontinue models, both without notice or obligation. Dimensions are for reference only. See current full-line price book or www.deltafaucet.com for finish options and product availability.

DSP-B-T14092 Rev. E

TUB AND SHOWER FAUCET TRIM

- Addison™ Bath Collection
- Valve Only (T14092)
- Shower Only (T14292)
- Tub/Shower (T14492)

FEATURES:

- Monitor® 14 Series pressure balanced single handle bath mixing valve trim
- H_2Okinetic® Technology showerhead

STANDARD SPECIFICATIONS:

- Maintains a balanced pressure of hot and cold water even when a valve is turned on or off elsewhere in the system.
- For use with MultiChoice® Universal rough valve body. (R10000 Series)
- Back-to-back installation capability.
- Solid brass forged body.
- Temperature only controlled with handle.
- Field adjustable to limit handle rotation into hot water zone.
- 120° maximum handle rotation.
- All parts replaceable from the front of the valve.
- 2.0 gpm max @ 80 PSI.
- "-LHD" models have pad printed red/blue temperature indication less showerhead.
- Stem extension kit RP77991 can be ordered to allow for an additional 1 3/4" wall thickness. RP77991 ships with chrome escutcheon screws. For special finishes also order RP12630 escutcheon screws in desired finish.

WARRANTY

- Lifetime limited warranty on parts (other than electronic parts and batteries) and finishes: or, for commercial users, for 5 years from date of purchase.
- 5 year limited warranty on electronic parts (other than batteries); or, for commercial users, for 1 year from the date of purchase. No warranty is provided on batteries.

COMPLIES WITH:

- ASME A112.18.1 / CSA B125.1
- ASSE 1016
- Indicates compliance to ICC/ANSI A117.1 - Valve control only
- EPA WaterSense®

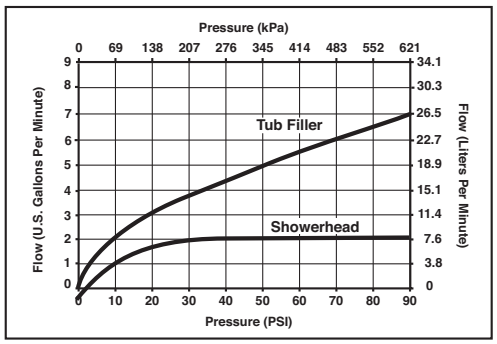

DELTA FAUCET COMPANY

55 E. 111th Street, Indianapolis, Indiana 46280
350 South Edgeware Road, St. Thomas, ON N5P 4L1
© 2015 Masco Corporation of Indiana