KGUW1-30

30 Inch Single Bowl Granite
Undermount Kitchen Sink

Kräus
SPECIFICATION SHEET

Sink Dimensions
Overall Dimensions: 29" x 19"
Bowl Dimensions: 27" x 16"
Sink Depth: 10"

Features
- Granite Composite
- Undermount Single Bowl Sink
- Required Minimum Cabinet Size: 33" Left to Right, 24" Front to Back
- Rear Off-Set Drain
- 3 1/2" Drain Opening

Accessories Included
- Cutting Board KCB-WS301SA
- Kitchen Sink Strainer ST-4
- Kitchen Rolling Mat KRM-11BL

Available Colors
- White

CODES/STANDARDS:
Product Certification
cUPC

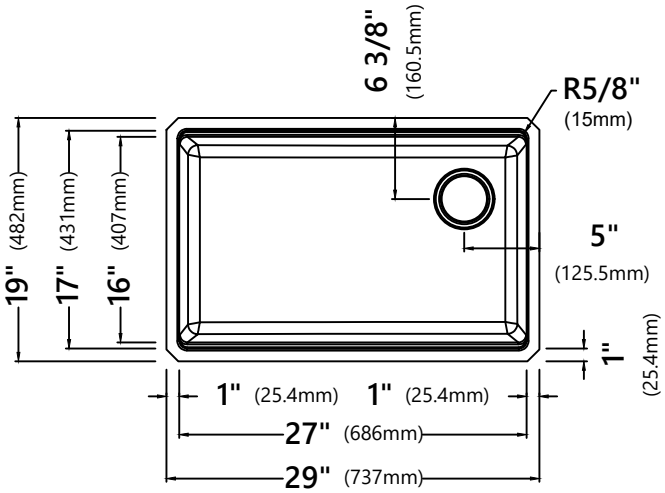

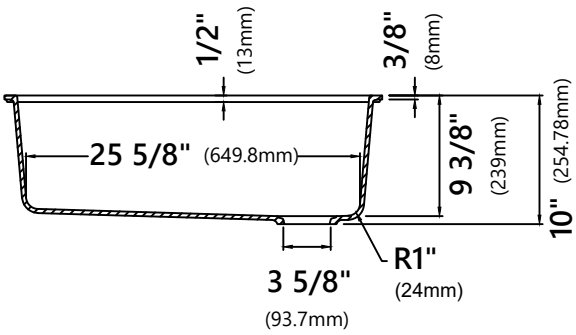

NOTE: Although Kraus granite and quartz composite sinks are highly heat resistant, placing hot items right from the stove or oven directly into the sink may cause surface discoloration. Consider using a trivet or rolling mat for extremely hot items to avoid potential heat damage.

NOTE: It is not recommended to install this sink with a negative reveal. Doing so will prohibit the use of any workstation accessories as they will not fit.

Warranty
Kraus Limited Lifetime Warranty
see website for details **www.kraususa.co**m

Kraus USA Customer Service
1.800.775.0703 | customerservice@kraususa.com

REV. January 26, 2021

KRM-11

Multipurpose Roll-Up Dish Drying Rack

SPECIFICATION SHEET

Rolling Mat Dimensions
Overall Dimensions: 16 7/8" x 12" x 3/8"

Features
- Roll-up over-the-sink drying rack
- Stainless steel construction with non-slip silicone coating
- Rolls up into a compact cylinder for storage
- Dishwasher safe
- Heat-safe up to 400° F
- Holds up to 100 lbs
- BPA-free and FDA-approved
- For Use with KFR4-33, KGF1-30, KGF1-33, KGF2-30, KGF2-33, KWF210-30, KWF210-33, KWF210-36, KWF410-30, KWF410-33, KWF410-36, KWT310-30, KWT310-33, KWT311-25, KWU110-27, KWU110-30, KWU110-32, KWU111-17, KWU111-23, KWU112-33, KWU120-45 and KWU210-57 kitchen sinks

Available Colors
- Black
- Brown
- Dark Blue
- Dark Grey
- Light Grey
- Aqua
- Green
- Red
- Yellow

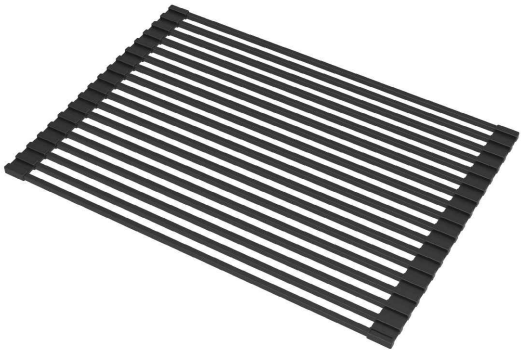

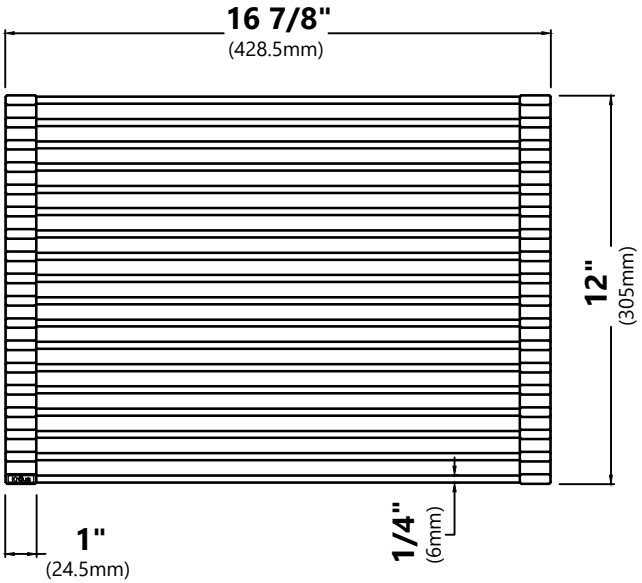

Warranty
Kraus One Year Limited Warranty
see website for details **www.kraususa.com**

Kraus USA Customer Service
1.800.775.0703 | customerservice@kraususa.com

REV. June 21, 2020

KCB-WS301

Cutting Board

SPECIFICATION SHEET

Cutting Board Dimensions
Overall Dimensions: 16 7/8" x 11" x 1/4"

Features
- Designed to Use Over the Sink and On the Counter
- BPA-free and FDA-approved
- Included with KGF1-30 and KGF1-33 kitchen sinks

Warranty
Kraus Limited Lifetime Warranty
see website for details **www.kraususa.com**

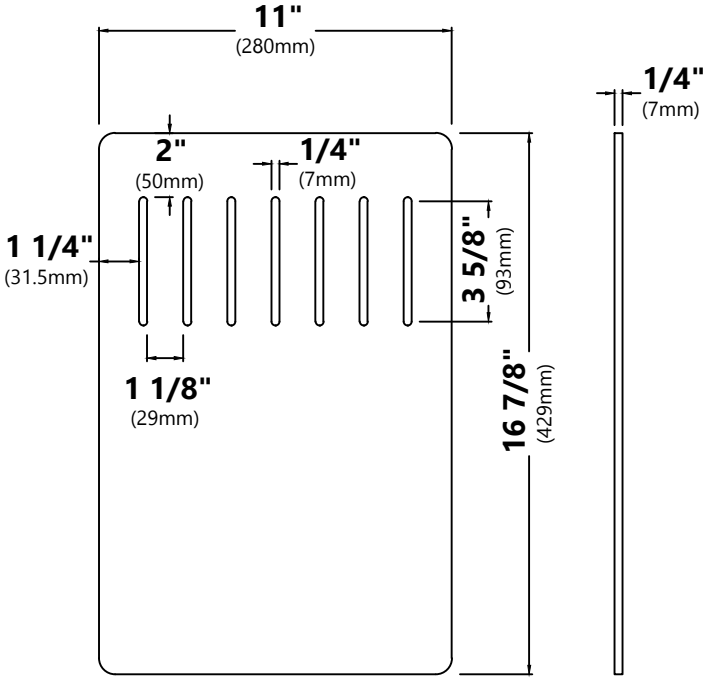

Kraus USA Customer Service
1.800.775.0703 | customerservice@kraususa.com

REV. January 30, 2019

ST-4

Stainless Steel Kitchen Sink Strainer

SPECIFICATION SHEET

Grid Dimensions
Overall Dimensions: ϕ4 1/2" x 2 5/8"

Features
- Premium Stainless Steel construction
- Fits Standard 3 1/2" or 4" Drain Opening
- Removable Strainer Prevents Debris from Clogging Drain Pipe
- Tailpiece Included
- Decorative Stainless Steel Cover Fits Over Drain

Warranty
Kraus Limited Lifetime Warranty
see website for details **www.kraususa.com**

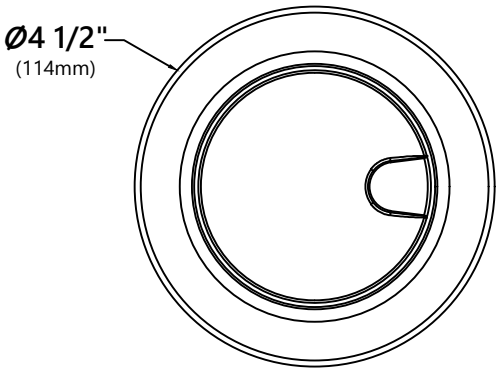

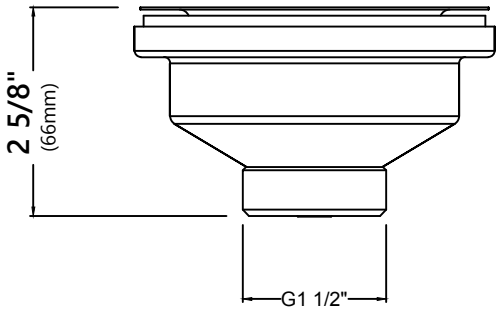

Kraus USA Customer Service
1.800.775.0703 | customerservice@kraususa.com

REV. December 22, 2018