QUOIZEL
6 CORPORATE PARKWAY
GOOSE CREEK, SC. 29445
www. quoizel. com

Assembly Instruction Sheet #IS-TVN232DK_R1
For Style TVN232DK

Please go to **www.quoizel.com** for product cleaning tips. Go to the **Care + Maintenance** selection.
Tools Required: Flathead screwdriver, Phillips screwdriver, pliers, wire cutters, wire strippers, electrical tape, safety glasses.
Light Source: (6) Medium Base Vintage Bulbs 60W (provided), Maximum 100W.
Estimated Assembly Time: 30-45 minutes
Preparation: Identify and inspect all parts before beginning installation. Check package content list and diagrams below to be sure all parts are present. If any parts are missing or damaged, do not attempt to assemble, install, or operate the fixture. Contact customer service for replacement parts.

Warnings and Cautions

Turn off electricity at circuit breaker or main fuse box before installation. Consult a licensed electrician if in doubt.

These instructions are provided for your safety. It is very important you read them completely before installing the fixture. We strongly recommend that a licensed, professional electrician perform the installation.

Disconnect fixture from power source before replacing bulbs. Make sure bulbs are given sufficient time to cool before removal.

Package Contents

Part	Description	Quantity
A	Crossbar	1 pc.
B	Nipple	1 pc.
C	Lock Washer	1 pc.
D	Hex Nut	2 pcs.
E	Lock Ball	1 pc.
F	Ceiling Canopy	1 pc.
G	6” Rod	4 pcs.
H	12” Rod with Nipple	2 pcs.
I	12” Rod	2 pcs.
J	Socket Assembly	1 pc.
K	Vintage Bulb	6 pcs.

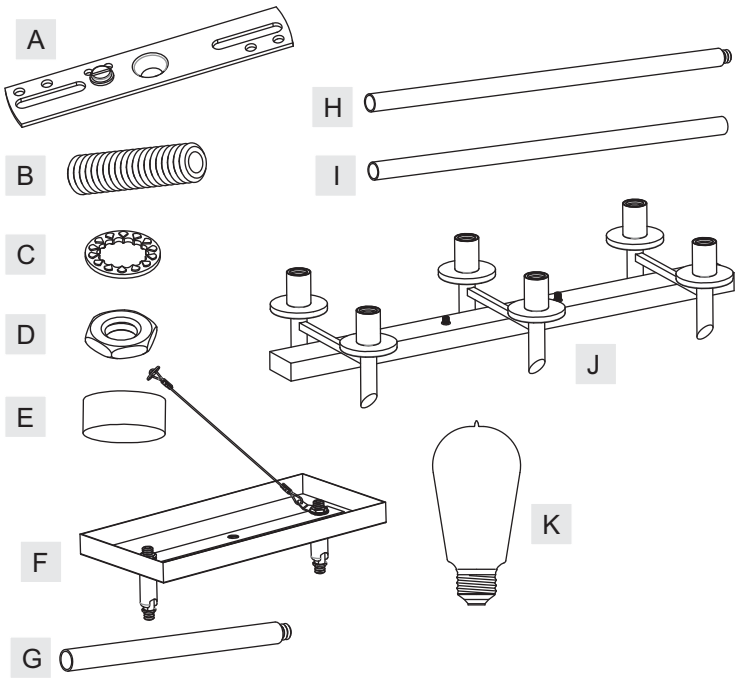

Thank you for purchasing a Quoizel product.
Need assistance with parts or assembly? Call Quoizel customer service at 1-800-645-3184
or visit us on-line at www.quoizel.com

© 2017 Quoizel Inc.
Revised Date: 2017-08-18

TVN232DK
FINISH: WESTERN BRONZE

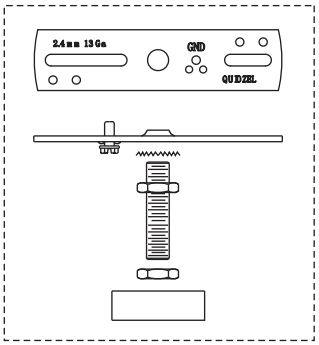

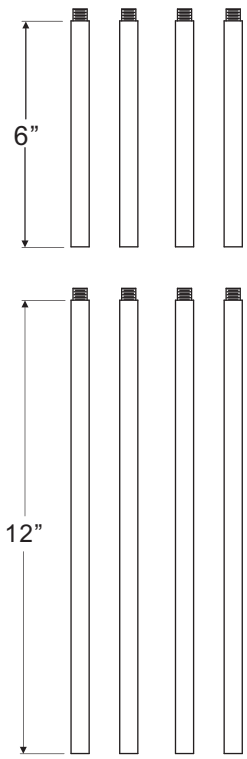

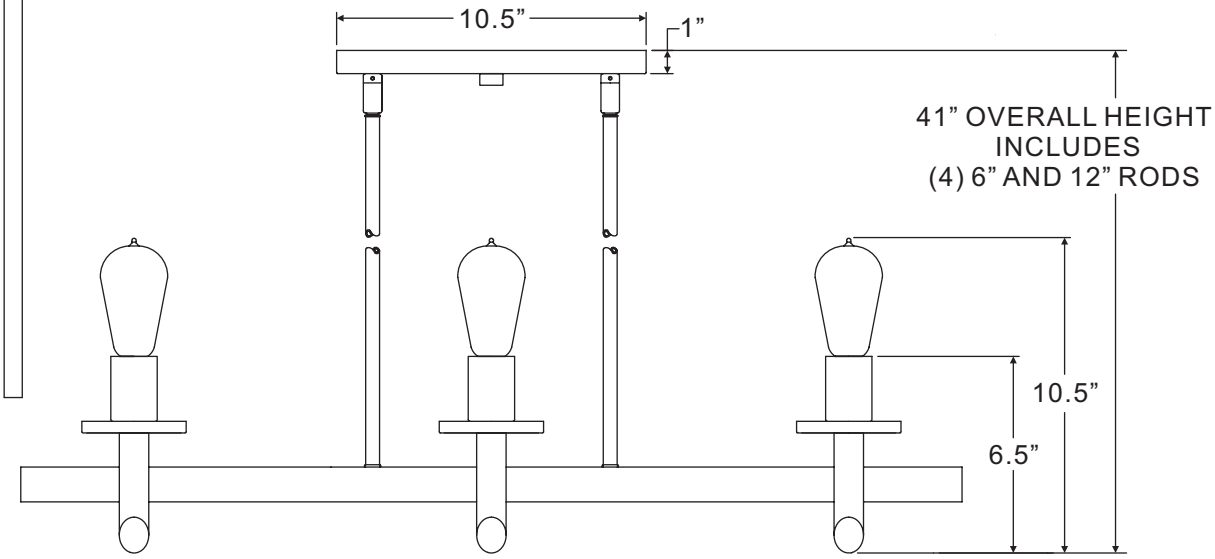

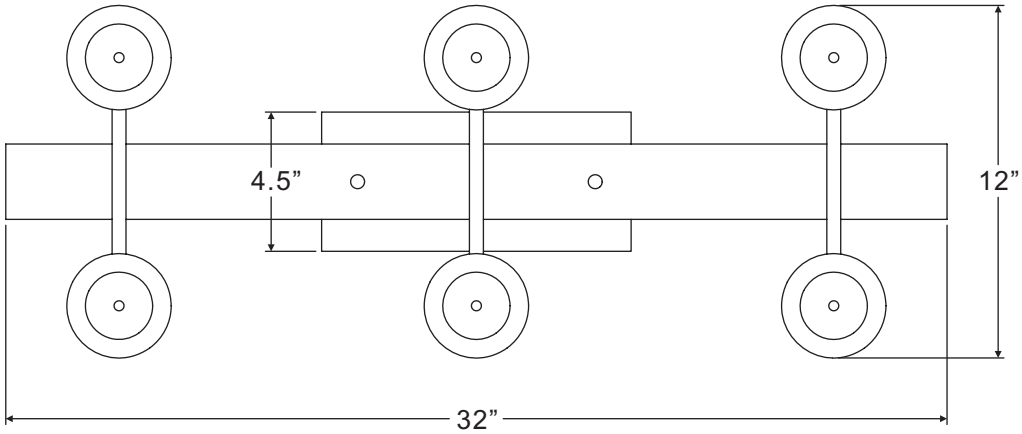

NOTE: ALL DIMENSIONS ARE ROUNDED UP TO THE NEAREST 1/2″

QUOIZEL
6 CORPORATE PARKWAY
GOOSE CREEK, SC. 29445
www. quoizel. com

Assembly Instruction Sheet #IS-TVN232DK_R1
For Style TVN232DK

STEP 1 – Assemble Rods

A. Determine the Rods (G/H/I) to be assembled according to your hanging height.
B. Pass Supply Wires and Ground Wire through the chosen Rods (G/H/I). Thread the chosen Rods (G/H/I) and the Socket Assembly (J) together. Hand tighten until snug.

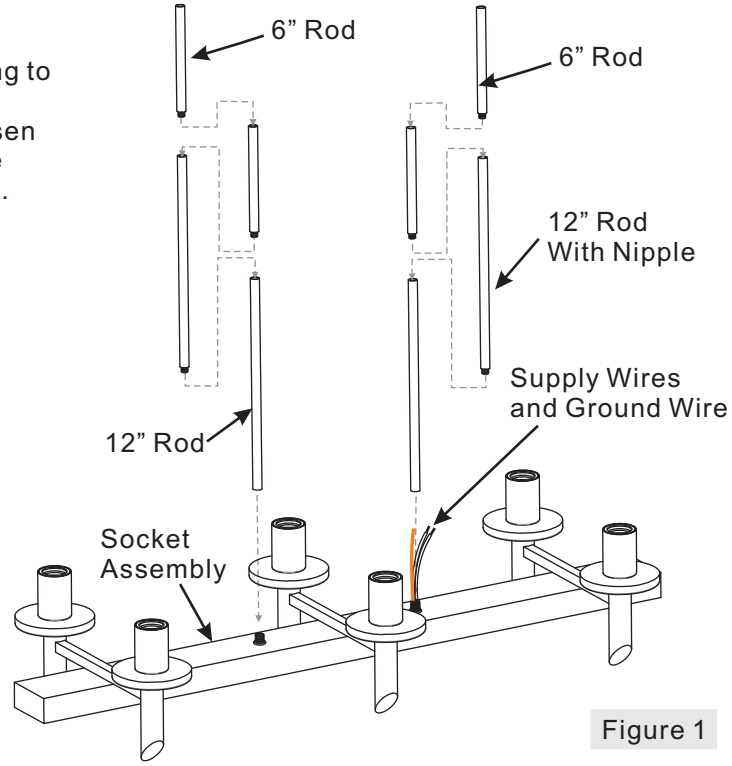

Figure 1

STEP 2 – Remove Swivel from Ceiling Canopy

A. Take apart Swivel, Ceiling Canopy, Reinforcing Plate, Lanyard, Lock Washer, by unscrew Hex Nut from Nipple on the top of Swivel.

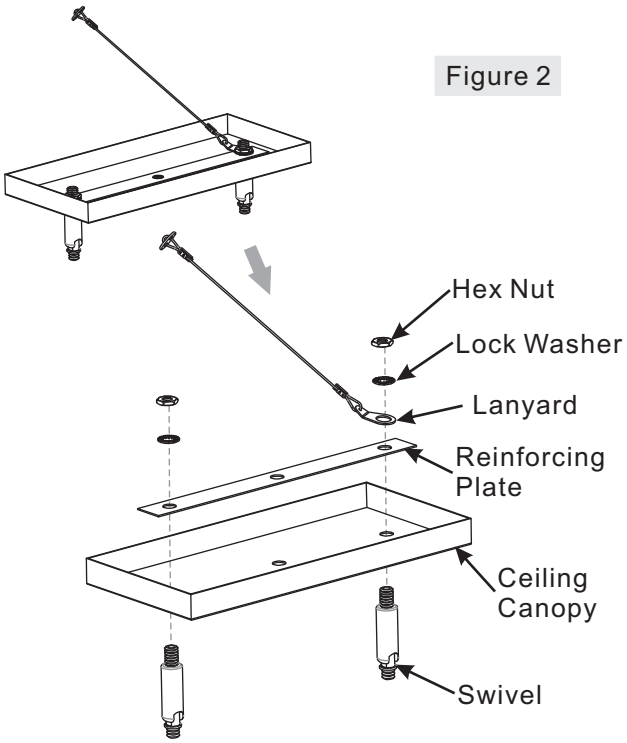

Figure 2

Thank you for purchasing a Quoizel product.
Need assistance with parts or assembly? Call Quoizel customer service at 1-800-645-3184
or visit us on-line at www.quoizel.com

© 2017 Quoizel Inc.
Revised Date: 2017-08-18

STEP 3 – Assemble Ceiling Canopy

A. Pass the Supply Wires and Ground Wires through Swivel with Nipple, the Ceiling Canopy, Reinforcing Plate, Lanyard, Lock Washers and Hex Nuts.
B. Screw Swivels into the top end of the Upper Rod. Hand tighten until snug.
C. Pass the Ceiling Canopy over the top ends of the Swivel . Place Reinforcing Plate, Lanyard and Lock Washers over one Swivel as shown and secure with Hex Nuts. Tighten until snug.

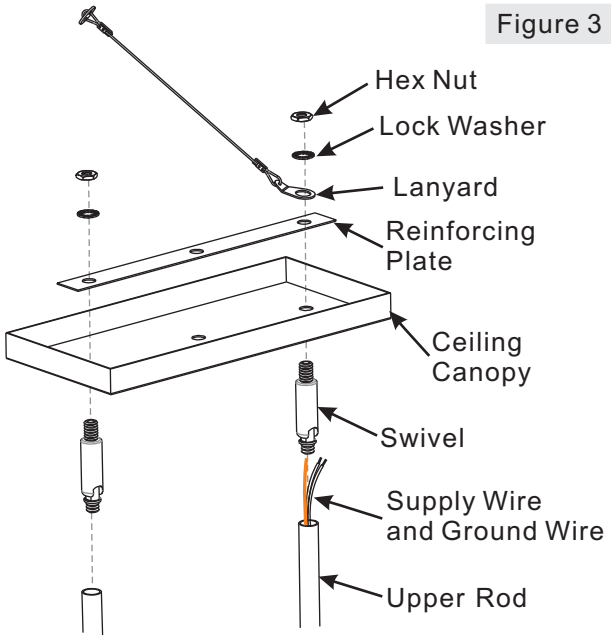

Figure 3

STEP 4 – Attach Crossbar to Outlet Box

A. Secure the Crossbar (A) to the outlet box with outlet box screws (not supplied). Tighten until snug.

Figure 4

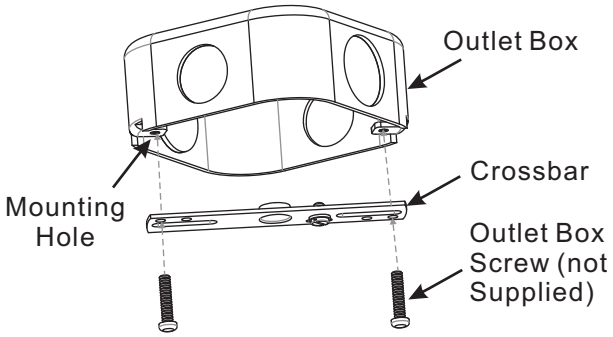

STEP 5 – Attach Nipple to Crossbar

A. Thread one Hex Nut (D) onto the top end of the Nipple (B).
B. Place one Lock Washer (C) over the top end of the Nipple (B) and then thread the Nipple (B) into the center lock hole of the Crossbar (A).
C. Using pliers, thread the Hex Nut (D) against the Crossbar (A) and hand tighten until snug.

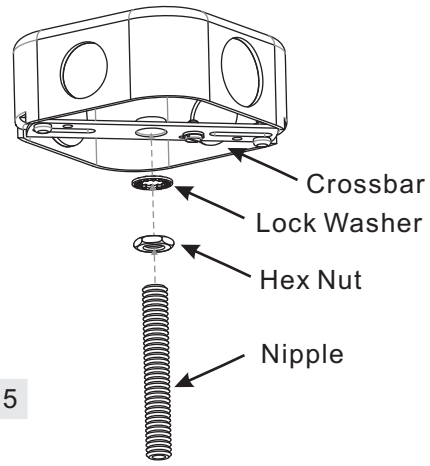

Figure 5

Thank you for purchasing a Quoizel product.
Need assistance with parts or assembly? Call Quoizel customer service at 1-800-645-3184
or visit us on-line at www.quoizel.com

© 2017 Quoizel Inc.
Revised Date: 2017-08-18

STEP 6 – Attach Lanyard

A. The purpose of the lanyard is to provide the installer a means to support the fixture from the junction box while connecting the electrical wires. This enables the fixture to hang from the junction box and your hands are free to make the wire connections.

B. Turn the Button Stop so it November be inserted into the crossbar slot. Make sure the Button Stop is completely inside the crossbar. Slowly release the fixture to make sure it is supported by the Button Stop. Proceed to the wiring steps. Once you are complete with the wiring there is nothing to do with Lanyard. The Lanyard will push into the junction box when the fixture is placed for final mounting.

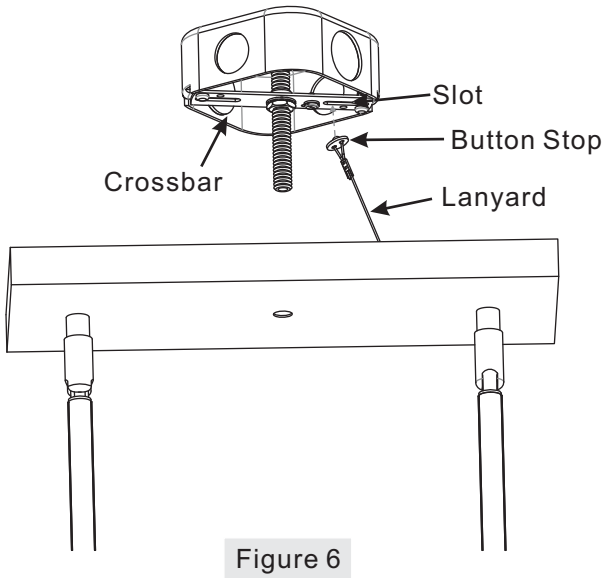

Figure 6

STEP 7 – Making the Wire Connections

A. Use standard wire connectors (not included) to make all wire connections. Twist connectors until wires are tightly joined together. Wrap each connection with approved electrical tape and carefully stuff all the connected wires into outlet box.

Note: If the electrical wire is going to be cut shorter than provided you will need to identify the "L" line wire and the "N" neutral wire before you cut the excess wire off. One is labeled N and the other labeled L. To do this separate the "L" line wire and the "N" neutral wire as far as you need to. Re-label the wire near where you want to make the cut. Be sure to mark the wire on the side of the fixture and not on the excess wire being cut and removed.

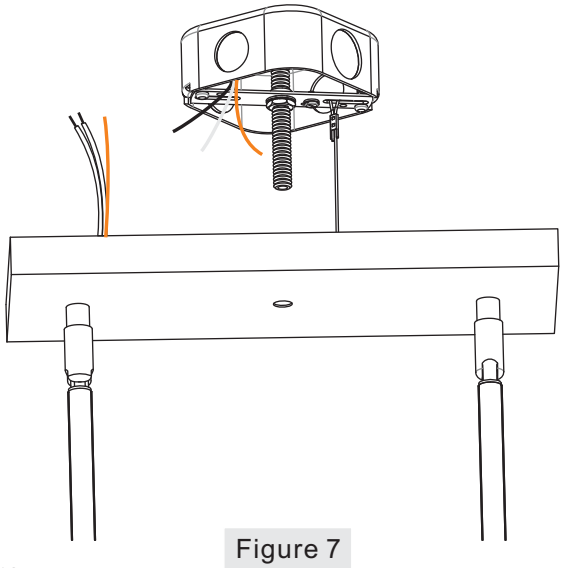

Figure 7

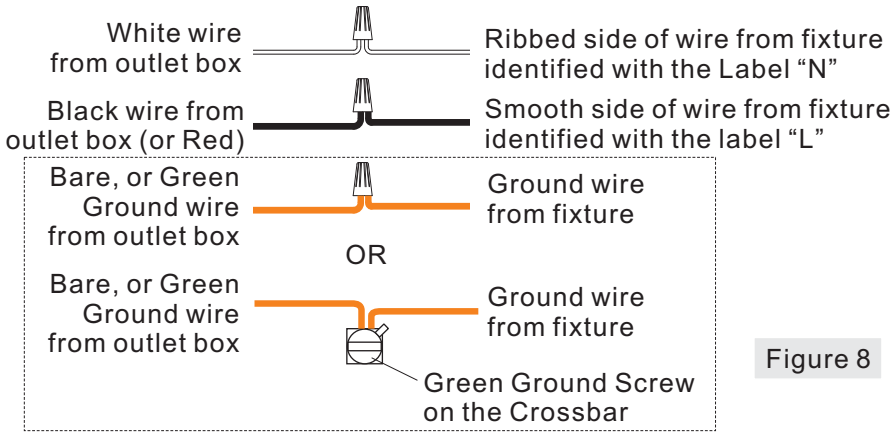

Figure 8

Thank you for purchasing a Quoizel product.
Need assistance with parts or assembly? Call Quoizel customer service at 1-800-645-3184
or visit us on-line at www.quoizel.com

© 2017 Quoizel Inc.

Revised Date: 2017-08-18

STEP 8 – Install Ceiling Canopy

A. Pass the Ceiling Canopy (G) over the end of the Nipple (B). Secure by threading the Hex Nut (D) onto the Nipple. Hand tighten until snug.
B. threading the Lock Ball (E) onto the Nipple (B). Hand tighten until snug.

Figure 9

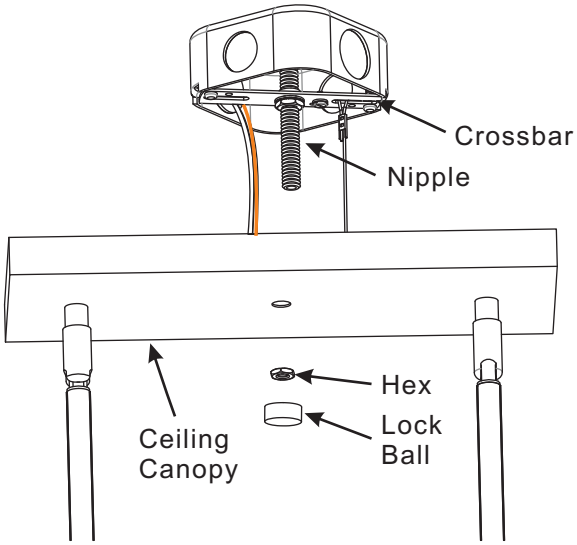

STEP 9 – Install Bulbs

A. Insert bulbs (K) onto sockets and screw snugly into place.

Your fixture is now assembled and ready to use.
Enjoy!

Figure 10

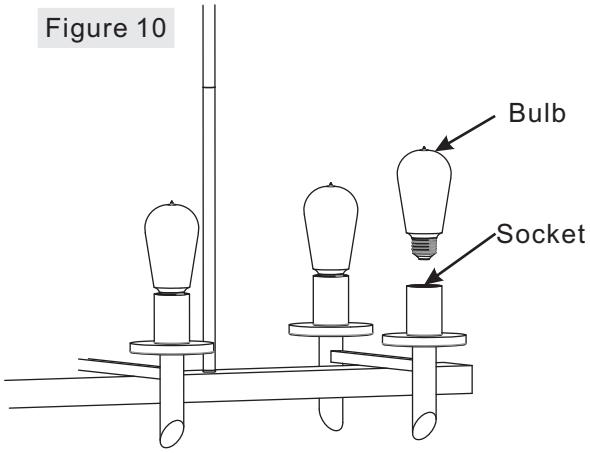

Thank you for purchasing a Quoizel product.
Need assistance with parts or assembly? Call Quoizel customer service at 1-800-645-3184
or visit us on-line at www.quoizel.com

© 2017 Quoizel Inc.
Revised Date: 2017-08-18