330005

K 300C

KICHLER®

Kichler® Lighting
7711 East Pleasant Valley Road
P.O. Box 318010
Cleveland, Ohio 44131-8010

Customer Service
866.558.5706
8:30 AM to 5:00 PM EST,
Monday - Friday

52” Bentzen Select LED

Includes our new
Wall Remote Control System

Instruction Manual

KICHLER®

330005

K 300C

1. SAFETY RULES

1. To reduce the risk of electric shock, insure electricity has been turned off at the circuit breaker or fuse box before beginning.

2. All wiring must be in accordance with the National Electrical Code and local electrical codes. Electrical installation should be performed by a qualified licensed electrician.

3. **WARNING:** Suitable for use with solid-state speed controls.

4. **WARNING:** To reduce the risk of fire, electric shock, or personal injury, mount to outlet box marked "acceptable for fan support of 15.8 kg (35 lbs.) or less" and use mounting screws provided with the outlet box. Most outlet boxes commonly used for the support of light fixtures are not acceptable for fan support and may need to be replaced. Due to the complexity of the installation of this fan, a qualified licensed electrician is strongly recommended.

WARNING
TO REDUCE THE RISK OF FIRE, ELECTRIC SHOCK OR PERSONAL INJURY, MOUNT FAN TO OUTLET BOX MARKED "ACCEPTABLE FOR FAN SUPPORT".

5. The outlet box and support structure must be securely mounted and capable of reliably supporting a minimum of 50 pounds. Use only CUL Listed outlet boxes marked "FOR FAN SUPPORT".

6. The fan must be mounted with a minimum of 7 feet clearance from the trailing edge of the blades to the floor.

7. Do not operate reversing switch while fan blades are in motion. Fan must be turned off and blades stopped before reversing blade direction.

8. Avoid placing objects in the path of the blades.

9. To avoid personal injury or damage to the fan and other items, be cautious when working around or cleaning the fan.

10. Do not use water or detergents when cleaning the fan or fan blades. A dry dust cloth or lightly dampened cloth will be suitable for most cleaning.

11. After marking electrical connections, spliced conductors should be turned upward and pushed carefully up into outlet box. The wires should be spread apart with the grounded conductor and the equipment-grounding conductor on one side of the outlet box.

12. Electrical diagrams are reference only. Light kits that are not packed with the fan must be CUL Listed and marked suitable for use with the model fan you are installing. Switches must be CUL General Use Switches. Refer to the Instructions packaged with the light kits and switches for proper assembly.

WARNING
TO REDUCE THE RISK OF PERSONAL INJURY, DO NOT BEND THE BLADE BRACKETS (ALSO REFERRED TO AS FLANGES) DURING ASSEMBLY OR AFTER INSTALLATION. DO NOT INSERT OBJECTS IN THE PATH OF THE BLADES.

Special Notice
This appliance is equipped with a "Wattage Limiting Device" required by the United States Department of Energy. The device has been installed at the factory and can not be removed.

Installing Lamps in excess of 75 total watts will disable the unit's light fixture. If this should happen, you will need to reset the lighting fixture by turning the power off to the ceiling fan and/or light fixture, reinstalling lamps totaling less that 75 watts and then turning the power back on.

2. TOOLS AND MATERIALS REQUIRED

- Philips screw driver
- Blade screw driver
- 11 mm wrench
- Step ladder
- Wire cutters

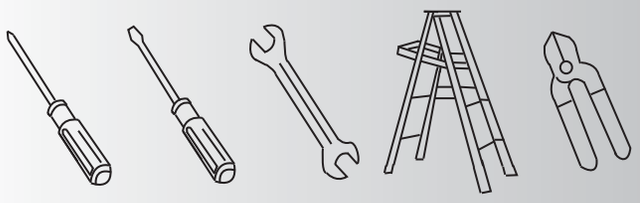

3. PACKAGE CONTENTS

Unpack your fan and check the contents. You should have the following items:

a. Fan blades (5)
b. Canopy & Ceiling mounting bracket
c. Ball/downrod assembly
d. Coupling cover
e. Fan motor assembly
f. Set of 5 blade brackets and Pre-Installed mounting screws
g. Light plate
h. Switch housing
i. 17W LED light kit
j. Glass shade
k. Receiver
l. Wall Transmitter
m. Part bag contents
1) Mounting hardware:
wood screws (2), flat washers (2), star washers (2), wire nuts (3), screws (2)
2) Blade attachment hardware:
screws (17), fiber washers (17)
3) Blade bracket attachment hardware:
screws (2)
4) Safety cable hardware:
wood screw, spring washer, flat washer
5) Balance Kit

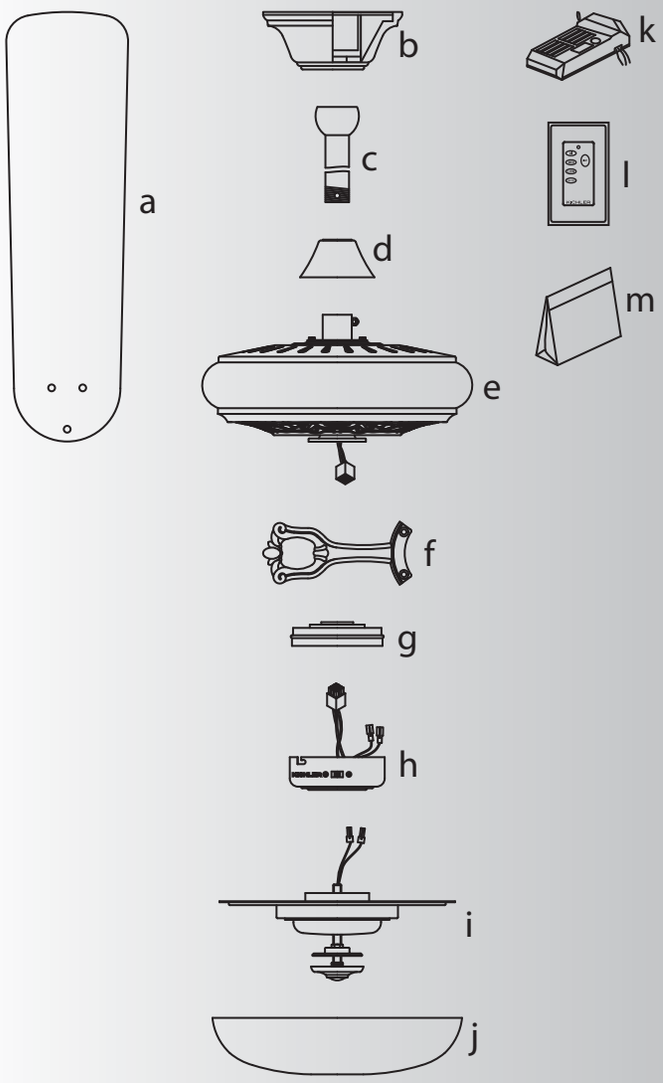

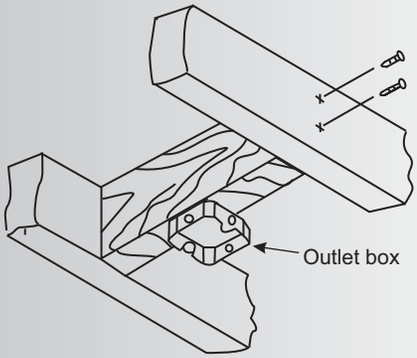

Fig. 1

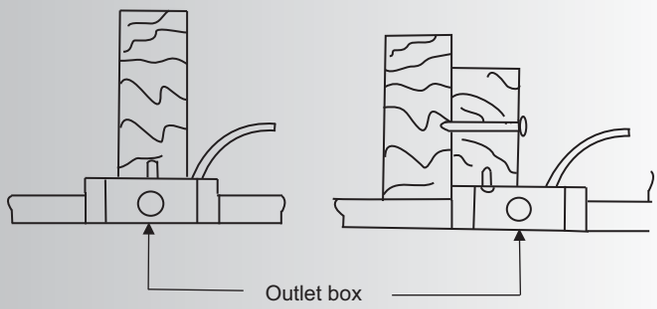

Fig. 2

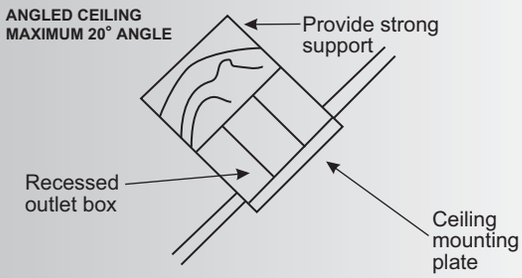

Fig. 3

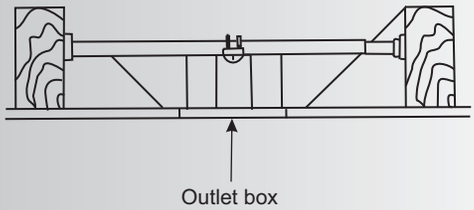

Fig. 4

4. MOUNTING OPTIONS

If there isn't an existing UL (cUL for Canadian Installation) listed mounting box, then read the following instructions. Disconnect the power by removing fuses or turning off circuit breakers.

Secure the outlet box directly to the building structure. Use appropriate fasteners and building materials. The outlet box and its support must be able to fully support the moving weight of the fan (at least 50 lbs). Do not use plastic outlet boxes.

Figures 1, 2 and 3 are examples of different ways to mount the outlet box.

NOTE: If you are installing the ceiling fan on a sloped (vaulted) ceiling, you may need a longer downrod to maintain proper clearance between the tip of the blade and the ceiling. A minimum clearance of 12" is suggested for optimal operation.

NOTE: Depending on the location you have selected for installation, you may need to purchase and install a "Joist Hanger" for the support of the outlet box. Make sure the joist hanger you purchase has been designed for use with ceiling fans. (Fig. 4)

5. HANGING THE FAN

REMEMBER to turn off the power before you begin.

To properly install your ceiling fan, follow the steps below.

Step 1. Remove the decorative canopy bottom cover from the canopy by turning the cover counter clockwise. (Fig. 5)

Step 2. Remove the ceiling mounting bracket from the canopy by removing (and save one of the two screws. Loosen the remaining screw by a half turn. (Fig. 5)

Step 3. Pass the 120 volt supply wires from the ceiling outlet box through the center of the ceiling mounting bracket. (Fig.6)

Step 4. Attach the ceiling mounting bracket to the outlet box using the screws and washers included with the outlet box. (Fig. 6)

Step 5. Remove the hanger ball from the downrod assembly by loosening the set screw, unscrewing and removing removing the cross pin and unscrewing the ball off the rod. (Fig.7)

Step 6. Loosen the two set screws and remove the hitch pin and retaining clip from the coupling on top of the motor assembly. (Fig. 8)

Step 7. Carefully feed the electrical lead wires from the fan up through the downrod. Thread the downrod into the coupling until the Hitch pin holes are aligned.

Next, replace the hitch pin and retaining clip. Tighten both set screws. (Fig. 8)

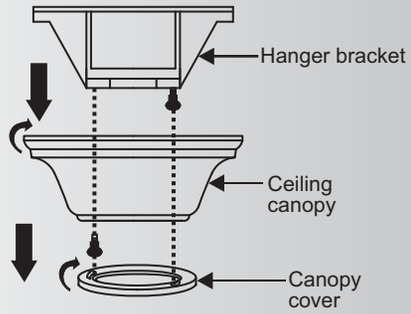

Fig. 5

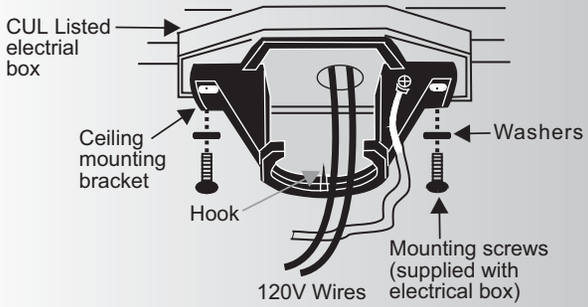

Fig. 6

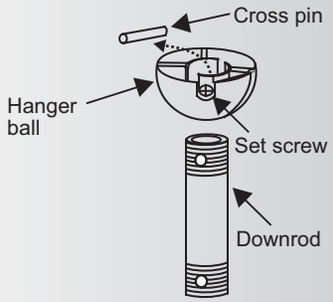

Fig. 7

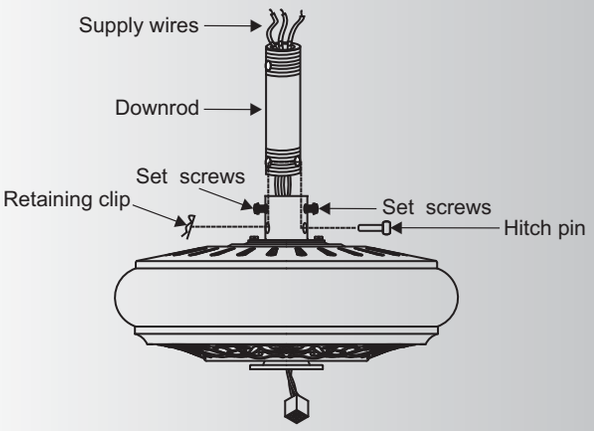

Fig. 8

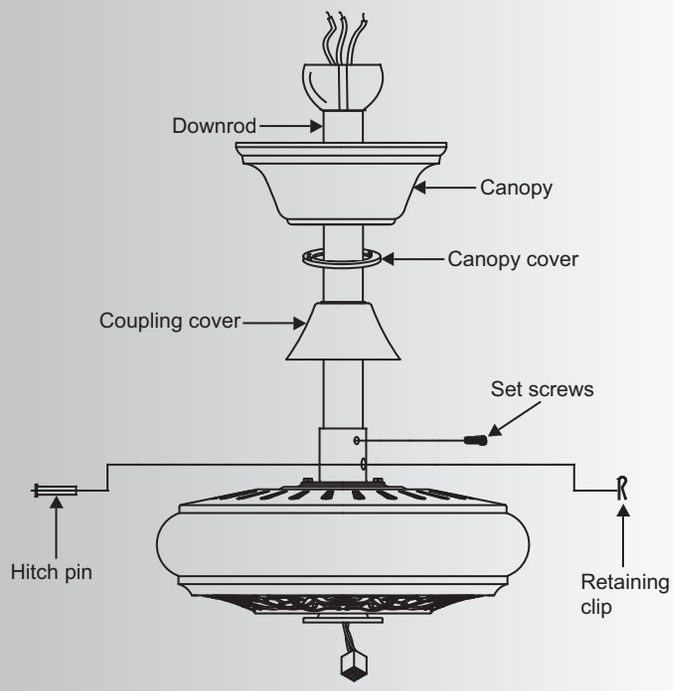

Fig. 9

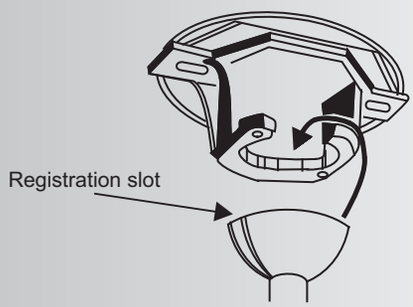

Fig. 10

Step 8. Slip the coupling cover, canopy cover and canopy onto the downrod.

Thread the hanger ball onto the downrod, insert the cross pin through the downrod and tighten. Now tighten the set screw. (Fig. 9)

Step 9. Lift the motor assembly into position and place the hanger ball into the ceiling mounting bracket.

Rotate the entire assembly until the "Check Tab" has dropped into the "Registration Slot" and seats firmly. (Fig. 10)

The entire motor assembly should not rotate (left or right) when seated properly.

WARNING: Failure to reattach the cross pin and seat the "Check Tab" can cause the fan to fall from the ceiling during operation. Take special care to make sure this pin is reattached.

6. INSTALLATION OF SAFETY SUPPORT (required for Canadian installation ONLY)

A safety support cable is provided to help prevent the ceiling fan from falling, please install it as follows.

Step 1. Attach the provided wood screw and washers to the ceiling joist next to the mounting bracket but do not tighten. (Fig. 11)

Step 2. Adjust the length of the safety cable to reach the screw and washers by pulling the extra cable through the cable clamp until the overall length is correct, put the end of the cable back through the cable clamp, forming a loop at the end of the cable. Tighten the cable clamp securely. Now, put the loop in the end of the safety cable over the wood screw and under the washer. Tighten the wood screw securely.

NOTE: Although the safety support cable is required for Canadian installations only. It's a good idea to make the attachment with any installation.

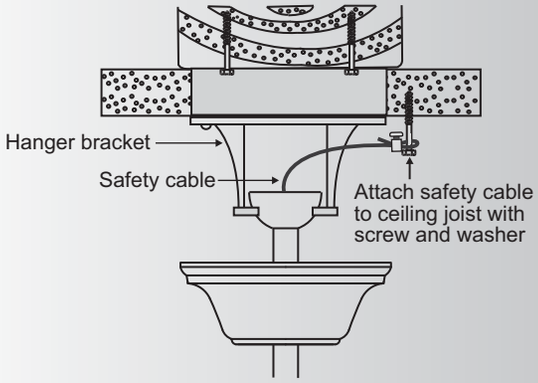

Fig. 11

7. ELECTRICAL CONNECTIONS

WARNING: To avoid possible electrical shock, be sure you have turned off the power at the main circuit panel.

Follow the steps below to connect the fan to your household wiring. Use the wire connecting nuts suppled with your fan. Secure the connectors with electrical tape. Make sure there are no loose wire strands or connections.

NOTE: The CoolTouch™ Control System is equipped with 16 possible frequency combinations to prevent interference from or with other remote control units. The frequency switches on your receiver and transmitter have been preset at the factory. Please recheck to make sure the switches on transmitter and receiver are set to the same position, any combination of settings will operate the fan as long as the transmitter and receiver are set to the same position. (Fig. 12)

Step 1. Insert the receiver into the ceiling mounting bracket with the flat side of the receiver facing the ceiling. (Fig. 13) For best performance, make sure the Black Antenna, on the end of the receiver, remains extended and not tangled with any of the electrical wires.

Step 2. Motor to Receiver Electrical Connections: (Fig. 14) Connect the black wire from the fan to the black wire marked "TO MOTOR L" on the receiver.

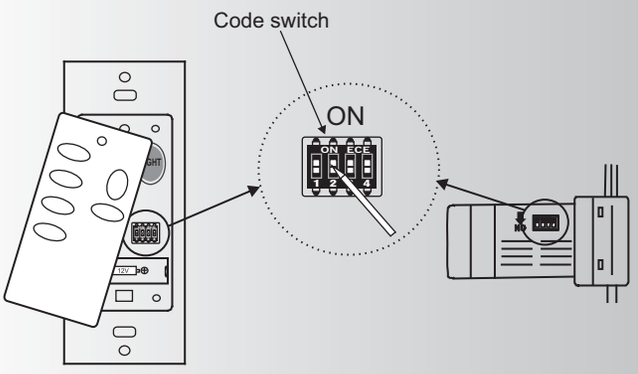

Fig. 12

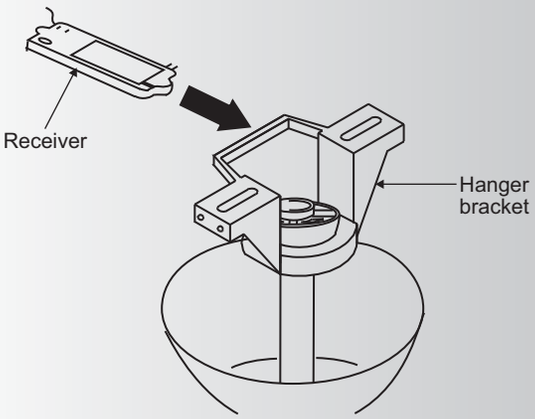

Fig. 13

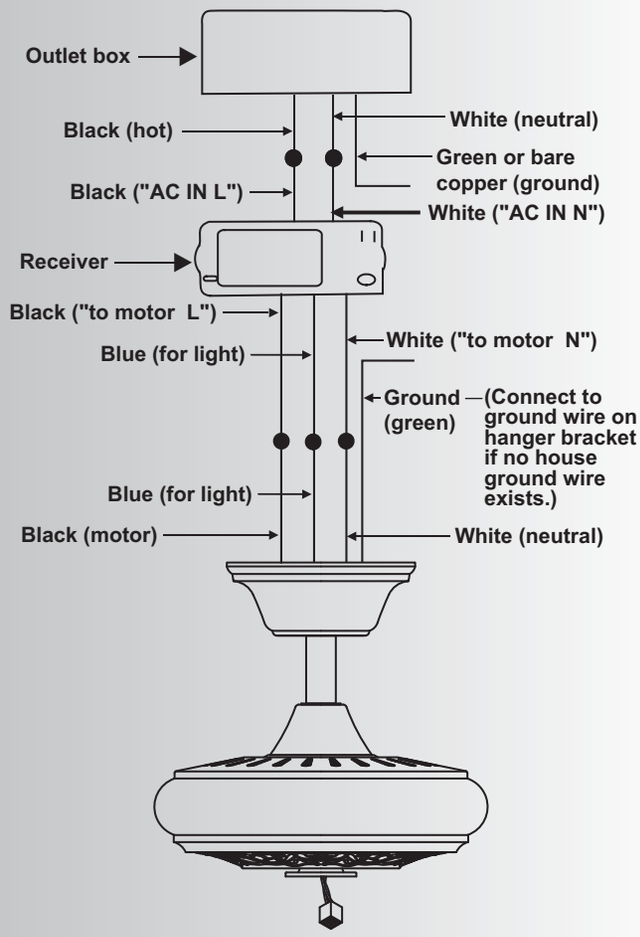

Fig. 14

Connect the white wire from the fan to the white wire marked "TO MOTOR N" on the receiver. Connect the blue wire from the fan to the blue wire marked "FOR LIGHT" on the receiver. Secure all the wire connections with the plastic wire nuts provided.

Step 3. (Fig. 14) Receiver to House Supply Wires Electrical Connections: Connect the black (hot) wire from the ceiling to the black wire marked "AC in L" from the receiver. Connect the white(neutral) wire from the ceiling to the white wire marked "AC in N" from the Receiver. Secure the wire connections with the plastic wire nuts provided.

Step 4. (Fig. 14) If your outlet box has a ground wire (green or bare copper) connect it to the fan ground wires; otherwise connect the hanging bracket ground wire to the mounting bracket. Secure the wire connection with a plastic nut provided. After connecting the wires, spread them apart so that the green and white wires are on one side of the outlet box and black and blue wires are on the other side. Carefully tuck the wire connections up into the outlet box.

Note: Fan must be installed at a maximum distance of 30 feet from the CoolTouch™ Remote Transmitter for optimal signal transmission between the transmitter and the fan's receiving unit.

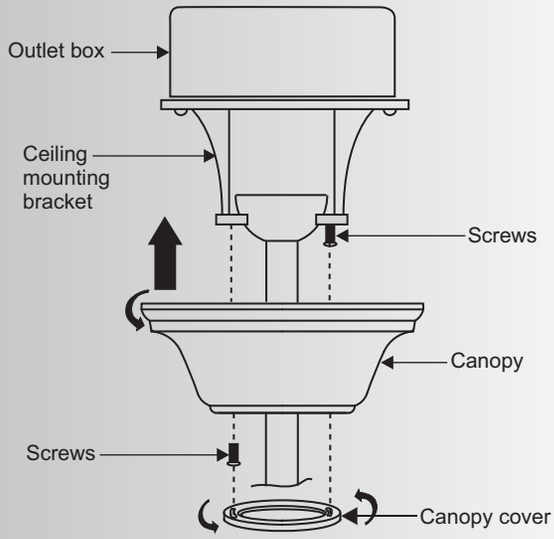

Fig. 15

8. FINISHING THE INSTALLATION

Step 1. Tuck all the connections neatly into the ceiling outlet box.

Step 2. Slide the canopy up to the mounting bracket and place one of the key hole slots over the mounting screw on the mounting bracket. Rotate the canopy until the screw head locks in place at the narrow section of the key hole. See figure 16.

Step 3. Align the remaining circular hole on the canopy with the remaining hole on the Ceiling Mounting Bracket. Insert and tighten the mounting screw you removed earlier and the mounting screw from Step 2 above. Now, attach the canopy cover to the mounting screw heads by inserting the screw heads into the bottom side of the canopy cover and rotating the cover clockwise.

NOTE: Adjust the canopy screws as necessary until the canopy and canopy cover are snug. (Fig. 15)

9. ATTACHING THE FAN BLADES

CAUTION: Remove the rubber shipping plate attached to the face of the motor. These plate keep the motor from shifting during shipping and MUST be removed during installation.

Step 1. Attach a blade to a blade bracket using the screws and fiber washers provided. (Fig. 16)

Make sure the blade is straight when set on the blade bracket. Tighten each mounting screw and then repeat this procedure for each blade.

Step 2. Attach each blade assembly to the motor using the "Pre-Installed" mounting screws in the blade bracket. (Fig 16)

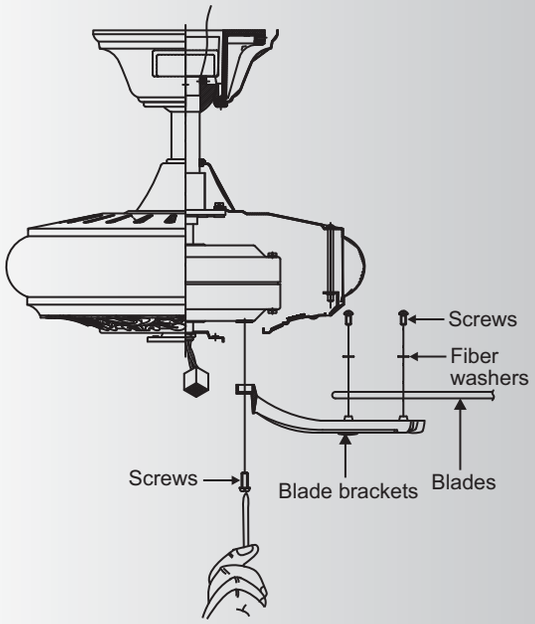

Fig. 16

10. INSTALLING THE LIGHT PLATE

Step 1. Loosen the two screws on the mounting ring attached to the motor shaft and "remove" and save the third screw. (Fig. 17)

Step 2. Place the key hole slots on the light plate over the two screws previously loosened on the mounting ring.

Turn the light plate until is locks in place at the narrow section of the key hole slots.

Tighten both key hole screws and replace the third screw previously removed and tighten securely.

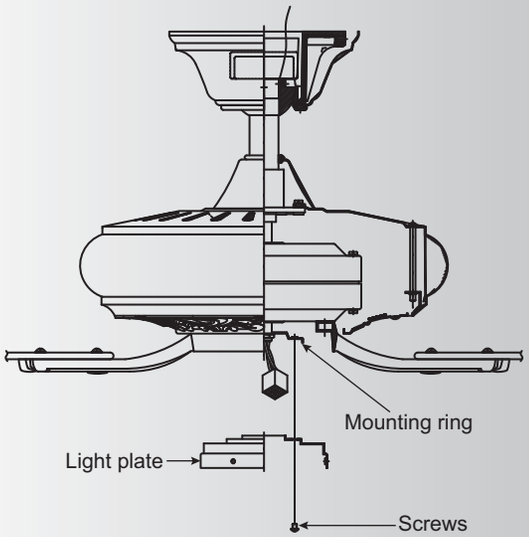

Fig. 17

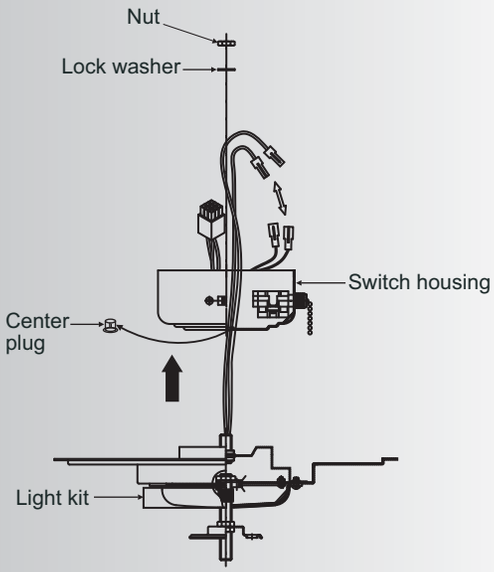

Fig. 18

11. INSTALLING THE LIGHT KIT TO SWITCH HOUSING

Remove and discard the center plug from the switch housing. Attach the light kit to the switch housing by feeding the light kit wires (black and white) through the hole in the center of the switch housing and then screw the threaded pipe on the light kit into the same hole. Add a nut & lock washer to the threaded pipe on the inside of the switch housing and tighten.

Attach the wires from the light kit to the wires inside the switch housing by pushing the polarized connections together. (Fig.18)

- White wire to White wire
- Black wire to Blue wire

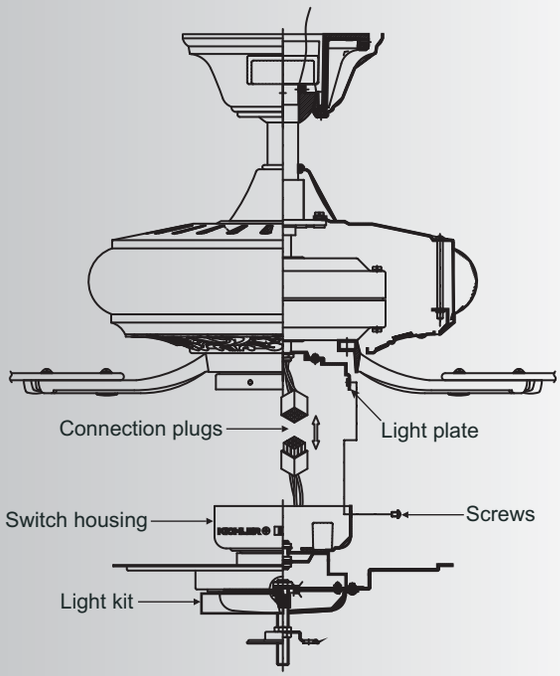

Fig. 19

12. INSTALLING THE LED LIGHT KIT

NOTE: Before starting installation, disconnect the power by turning off the circuit breaker or removing the fuse at fuse box.

Step 1. Loosen the 3 screws from the mounting plate.

Step 2. Raise and hold the LED light kit assembly close to the mounting plate. Push the nine pin square wire connectors together. One from the fan and one from the LED light kit assembly. (Fig. 19)

Step 3. Tuck the connections neatly into the switch housing and attach the LED light kit assembly to the ceiling fan. Place the key hole slots on the top edge of the switch housing over the mounting screw heads on the mounting plate. Turn the switch housing until the screw heads are at the narrow end of the key hole slots. (Fig.19) Tighten all of the screws.

13. INSTALLING THE GLASS SHADE

Step 1. Remove the decorative nut, glass cap and metal nut from the LED light kit. Place glass shade over the LED light kit stem, secure with the metal nut (rubber side on the top), add the glass cap and decorative nut. Do not overtighten. (Fig. 20)

Step 2. Restore power and your light kit is ready for operation.

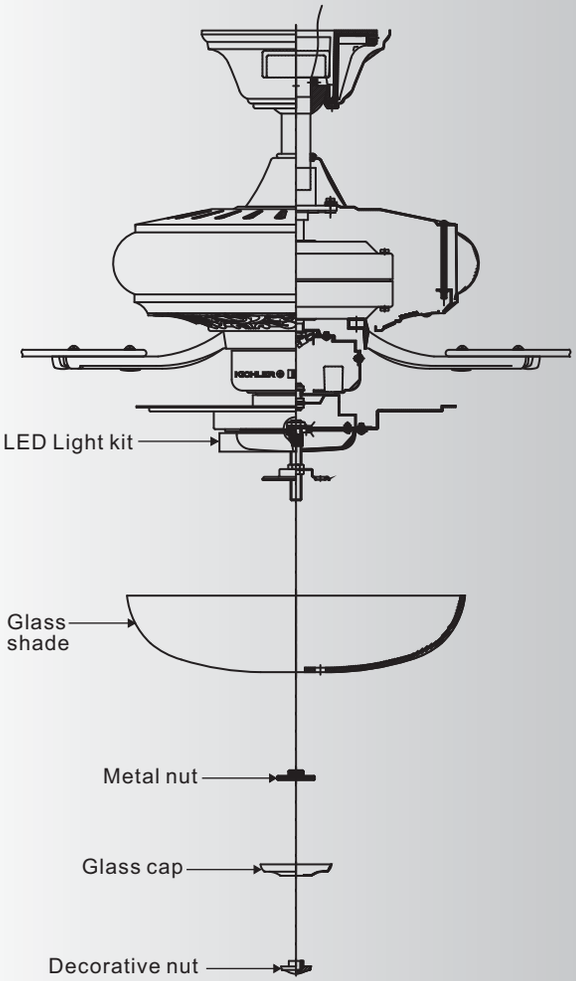

Fig. 20

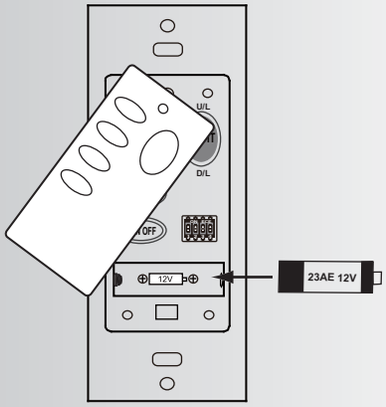

Fig. 21

14. INSTALLING THE BATTERIES

Remove the face plate of the Wall Switch by lifting at the top and then insert the supplied 12V battery. Duracell MN21/Eveready A23/GP 23A all 12V.

Replace the switch face plate.

To prevent possible damage to the transmitter, remove these batteries if not used for long periods of time (months).

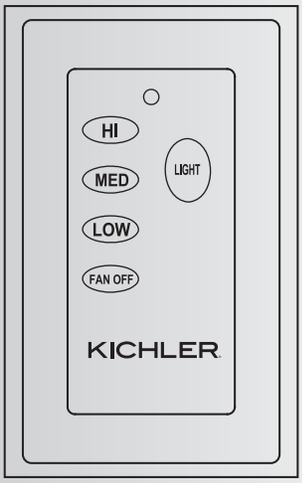

Fig. 22

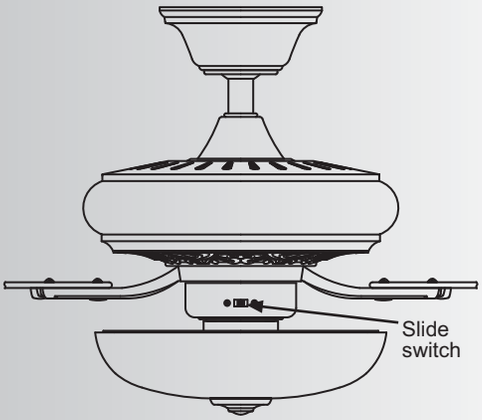

Fig. 23

15. OPERATING INSTRUCTIONS

HI Button = High Speed
MED Button = Medium Speed
LOW Button = Low Speed
FAN OFF Button = Motor Off
Light Button = the "LIGHT" button turns the light ON or OFF and also controls the brightness setting. (Fig. 22.)

Press and hold either button to set the desired brightness level. The next time you turn the light on, the system will remember this setting.

Press and release either button to turn the light ON or OFF.

This control system is NOT designed to "Reverse" the rotation of the blades. To set the fan blades in reverse, the reverse slide switch is located on the switch housing. (Fig. 23.)

16. INSTALLING THE BASIC FUNCTION WALL CONTROL SYSTEM WALL PLATE

Select a location to install the Basic Function Wall Control System Transmitter and Wall Plate.

Install the wall plate using an existing wall switch outlet box. Make sure the electrical power is TURNED OFF at the main panel before continuing.

Step 1. Remove the existing wall plate and the old switch from the wall outlet box. Wire nut the BLACK leads (hot) together and push back inside the outlet box. (Fig. 24)

Step 2. Install the wall plate on the existing wall outlet box using the screws provided. (Fig. 25)

After installing the wall anchors, attached the wall plate with the mounting screws to finish the installation.

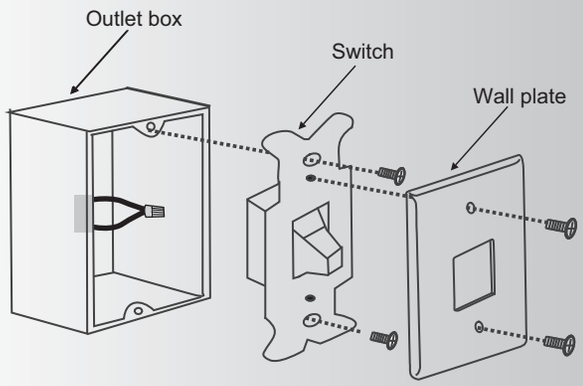

Fig. 24

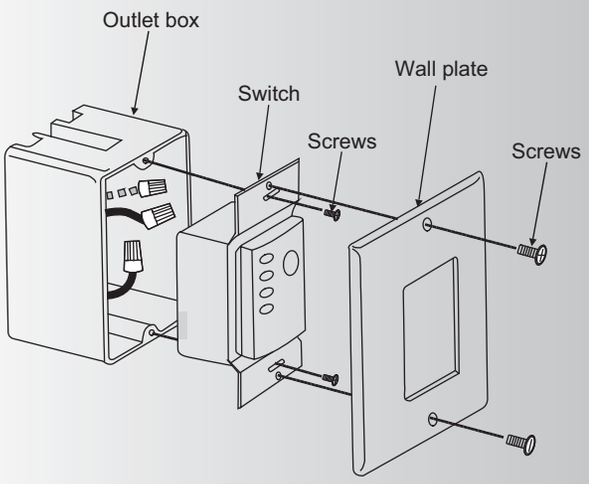

Fig. 25

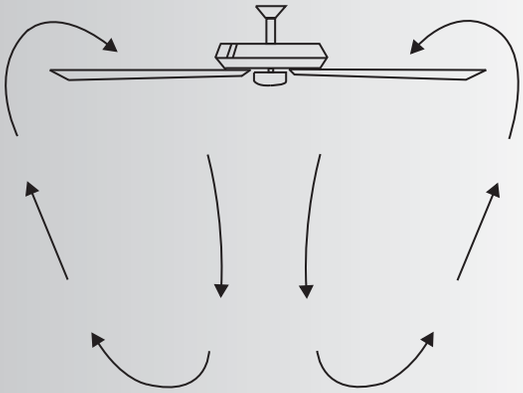

Fig. 26

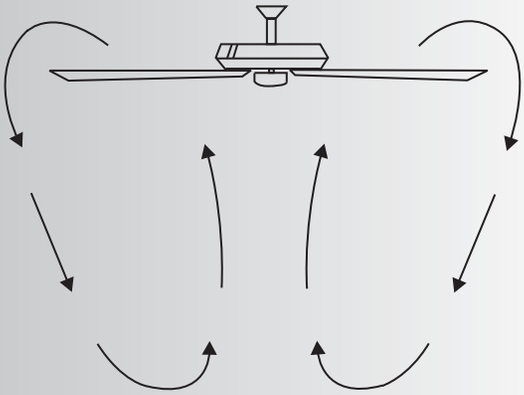

Fig. 27

17. OPERATING INSTRUCTIONS

The Black Slide Switch on the side of the switch housing controls the direction of the blades "Forward and Reverse".

Warm weather - Forward (counter clockwise) A downward airflow creates a cooling effect as shown in Fig. 26. This allows you to set your air conditioner on a warmer setting without affecting your comfort.

Cool weather - Reverse (clockwise) An upward airflow moves warm air off the ceiling area as shown in Fig. 27. This allows you to set your heating unit on a cooler setting without affecting your comfort.

NOTE: To change the direction of rotation for the fan blades, locate the reverse switch located on the top of the motor housing.

18. TROUBLESHOOTING

Problem	Solution
Fan will not start.	1. Check circuit fuses or breakers. 2. Check all electrical connections to insure proper contact. **CAUTION:** Make sure the main power is OFF when checking any electrical connection. 3. Make sure the transmitter batteries are installed properly. Positive (+) side facing out. 4. Insure the batteries have a good charge.
Fan sounds noisy.	1. Make sure all motor housing screws are snug. 2. Make sure the screws that attach the fan blade brackets to the motor are tight. 3. Make sure wire nut connections are not rubbing against each other or the interior wall of the switch housing. **CAUTION:** Make sure main power is off. 4. Allow a 24-hour "breaking-in" period. Most noise associated with a new fan disappear during this time. 5. If using an optional light kit, make sure the screws securing the glassware are tight. Make sure the light bulbs are not touching any other component. 6. Do not connect this fan to wall mounted variable speed control(s). they are not compatible with ceiling fan motors or remote controls. 7. Make sure the upper canopy is a short distance from the ceiling. It should not touch the ceiling.
Fan wobble.	1. Check that all blade and blade arm screws are secure. 2. Most fan wobbling problems are caused when blade levels are unequal. Check this level by selecting a point on the ceiling above the tip of one of the blades. Measure this distance. Rotate the fan until the next blade is positioned for measurement. Repeat for each blade. The distance deviation should be equal within 1/8". 3. Use the enclosed Blade Balancing Kit if the blade wobble is still noticeable. 4. If the blade wobble is still noticeable, interchanging two adjacent (side by side) blades can redistribute the weight and possibly result in smoother operation.
Remote control malfunction.	1. Ceiling Fans with remote control systems **CAN NOT** be operated in conjunction with any other control system EXCEPT a basic On/Off wall switch, if desired. 2. Make sure the frequency dip switches in the transmitter and receiver have identical settings. 3. Make sure the Black Antenna on the receiver is **NOT** tangled with any other electrical wires and is extended around the inside of the ceiling canopy.

19. SPECIFICATIONS

Fan Size	Speed	Volts	Amps	Watts	RPM	CFM	CFM/W	N.W.	G.W.	C.F.
52"	High	120	0.54	64.30	157	5341.00	83	12 kgs	13 kgs	3.07'
	Medium	120	0.40	34.00	111	3811.00	112			
	Low	120	0.26	14.00	65	2330.00	166			

These are approximate measurements. They do not include data for any lamps or fixtures attached to the ceiling fan.