FVS-1007

Single Lever Vessel Bathroom Faucet

SPECIFICATION SHEET

Faucet Dimensions
Overall Height: 12 1/2"
Overall Width: 2"
Spout Height: 8 1/4"
Spout Reach: 5 3/4"

Features
- Vessel Faucet
- Brass Body
- Lead Free Brass Waterway
- 25mm Ceramic Cartridge
- Single Hole Installation
- 29 1/4" Nylon Waterlines
- Coinslot Aerator
- Flow Rate 1.2gpm (4.5L/min) @ 60 psi
- Max Deck Thickness: 1 3/4"
- TPI of Aerator - M16.5*1

Accessories Included
- Hex Wrench
- Aerator Key

Optional Accessories
- Pop Ups PU-10 and PU-12

Available Finishes
- Chrome
- Satin Nickel
- Oil Rubbed Bronze
- Matte Black
- Spot Free Stainless Steel

CODES/STANDARDS:
Product Certification
cUPC (ASME A112.18.1/CSA B125.1)
NSF/ANSI Standard 61 and 372 certified by IAPMO
AB1953, EPA, CAL GREEN, MASS, FTC, DOE, CEC, ADA

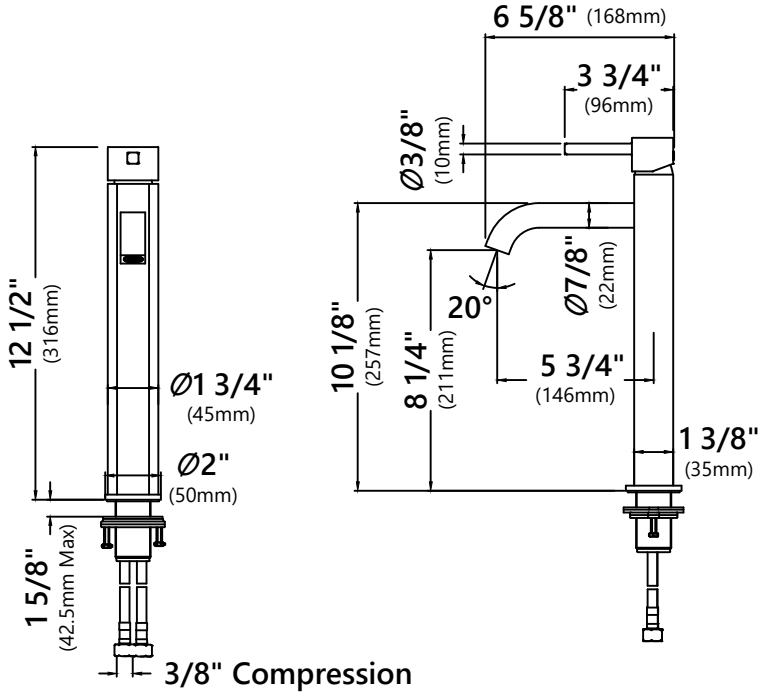

Warranty
Kraus Limited Lifetime Warranty
see website for details **www.kraususa.com**

Kraus USA Customer Service
1.800.775.0703 | customerservice@kraususa.com

REV. September 17, 2020

PU-10

Pop Up Drain w/o Overflow

SPECIFICATION SHEET

Pop Up Dimensions
Dimensions: 8 5/8" x Ø2 5/8"

Features
- Metal Construction
- Connection 1 1/4"
- Designed to Use w/ Above-Counter Vessel Sinks without overflow
- Fits Standard 1 3/4" Drain Opening

Available Colors
- Satin Nickel
- Gold
- Oil Rubbed Bronze
- Chrome
- Brushed Gold
- Matte Black

CODES/STANDARDS:
Product Certification
cUPC

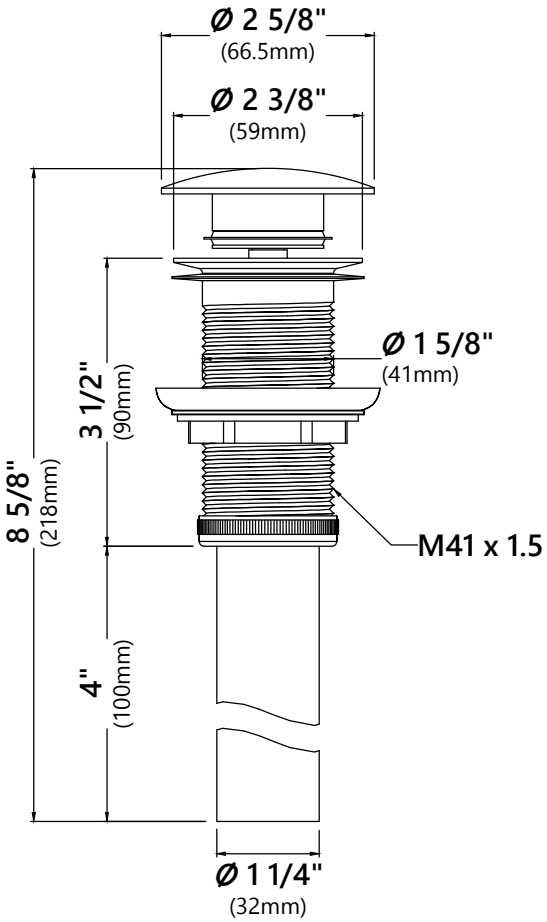

Warranty
Kraus Limited Lifetime Warranty
see website for details **www.kraususa.com**

Kraus USA Customer Service
1.800.775.0703 | customerservice@kraususa.com

REV. September 23, 2019