MONTE CARLO

CEILING FAN COMPANY

Owner's Guide and Installation Manual

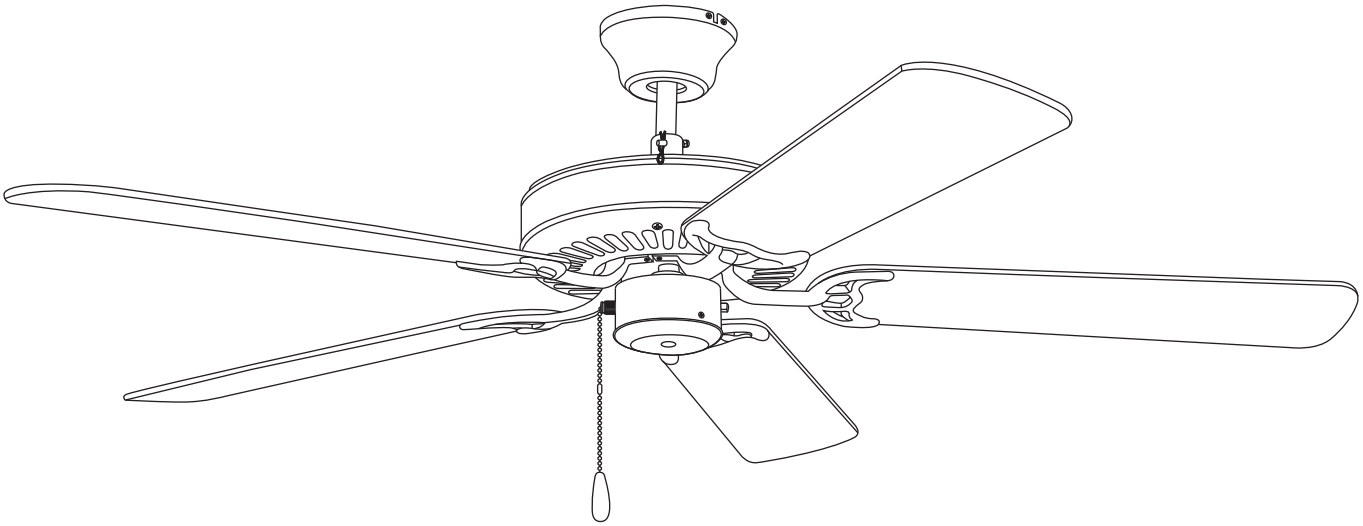

BF1-XX Series Fan

UL Model NO. : AC-552

Attach sales receipt to this card and retain as your proof of purchase

DATE OF PURCHASE:_____ **RETAILER NAME:**_____

MODEL NUMBER:_____ **RETAILER ADDRESS:**_____

To register your fixture, please visit our website www.montecarlofans.com

c UL US LISTED

6.64 kgs
14.6 lbs

Total fan weight

Cautions and Warnings

WARNING: TO REDUCE THE RISK OF FIRE, ELECTRIC SHOCK, OR INJURY TO PERSONS, OBSERVE THE FOLLOWING
READ AND SAVE THESE INSTRUCTIONS

Installation work and electrical wiring must be done by qualified person(s) in accordance with applicable codes and standards (ANSI/NFPA 70-1999), including fire-rated construction.

Use this unit only in the manner intended by the manufacturer. If you have any questions contact the manufacturer.

After making the wire connections, the wires should be spread apart with the grounded conductor and the equipment-grounding conductor on one side of the outlet box and ungrounded conductor on the other side of the outlet box. The splices, after being made, should be turned upward and pushed carefully up into the outlet box.

WARNING: Before you begin installing the fan, servicing or cleaning unit, Switch power off at Service panel and lock service disconnecting means to prevent power from being switched on accidentally. When the service disconnecting means cannot be locked, securely fasten a prominent warning device, such as a tag, to the service panel.

Be cautious! Read all instructions and safety information before installing your new fan. Review the accompanying assembly diagrams.

When cutting or drilling into wall or ceiling, do not damage electrical wiring and other hidden utilities.

Make sure the installation site you choose allows the fan blades to rotate without any obstructions. Allow a minimum clearance of 7 feet from the floor to the trailing edge of the blade.

WARNING: To Reduce The Risk Of Fire, Electric Shock, or Personal Injury, Mount To Outlet Box Marked "Acceptable for Fan Support of 15.9 kg (35 lbs) or less" And Use Mounting Screws Provided With The Outlet Box.

CAUTION: For Compliance with Local Codes and Regulations, If Installing The Secondary Support Safety Cable in the U.S., Do Not Remove Knockouts In The Outlet Box. Mount the secondary support safety cable through the reserved nail/screw hole on the outlet box to the building structure (or the ceiling joist).

WARNING: To reduce the risk of personal injury, do not bend blade holders during installation to motor, balancing or during cleaning. Do not insert foreign object between rotating blades.

Attach the mounting bracket using only the hardware supplied with the outlet box.

WARNING: To reduce the risk of fire or electric shock, this fan must be installed with an isolating wall control/switch.

WARNING: To reduce the risk of fire or electric shock, do not use this fan with any unverified solid state fan speed control device, or variable speed control.

If this unit is to be installed over a tub or shower, it must be marked as appropriate for the application.

Never place a switch where it can be reached from a tub or shower.

The combustion airflow needed for safe operation of fuel-burning equipment may be affected by this unit's operation. Follow the heating equipment manufacturer's guideline safety standards such as those published by the National Fire Protection Association (NFPA), and the American Society for Heating, Refrigeration and Air Conditioning Engineers (ASHRAE) and the local code authorities.

CAUTION: To Reduce the Risk of Electric Shock, Disconnect the electrical supply circuit to the fan before installing the light kit.

All set screws must be checked and tightened where necessary before installation.

Tools Required for Assembly (not included): Electrical Tape, Phillips Screwdriver, Pliers, Safety Glasses, Stepladder and Wire Strippers

Customer Service
800-969-3347

Customer Service Center
7400 Linder Ave.
Skokie, IL 60077
www.montecarlofans.com

© 2013 Monte Carlo Fan Company

Preparation

Warning: Before starting assembly of this product, please disconnect power to area and familiarize yourself with the safety information provided on page 2.

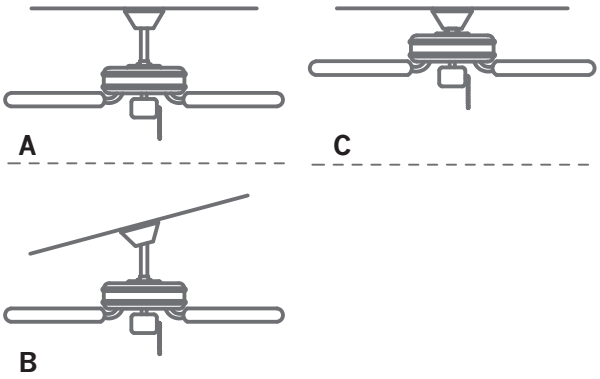

Determine mounting method to use.

A - Downrod Mount

B - Angle Mount

Important: If using the angle mount, check to make sure the ceiling angle is not steeper than 18º.

Important: If using the angle mount, make sure open end of mounting bracket is installed facing the higher point of the ceiling.

C - Flushmount

Note: Flushmount is not available with vaulted ceiling.

Installation Instruction

Before you begin installing the fan, Switch power off at Service panel and lock service disconnecting means to prevent power from being switched on accidentally. When the service disconnecting means cannot be locked, securely fasten a warning device, such as a tag, to the service panel. (Fig. 1)

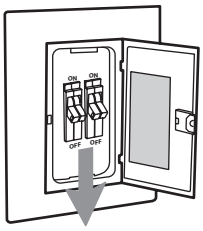

Fig. 1

Before installing this fan make sure the outlet box is properly installed to the house structure. To reduce the risk of fire, electric shock, or personal injury, mount to outlet box or supporting system acceptable for fan support (Mounting must support at least 35 lbs). (Fig. 2)

Use metal outlet box suitable for fan support and use only the screws (and may be with flat washers and lock washers) provided with the outlet box (must support 35 lbs). Before attaching fan to outlet box, ensure the outlet box is securely fastened by at least two points to a structural ceiling member (a loose box will cause the fan to wobble). Remove the two outlet box screws provided with the box, aligning the holes of the mounting bracket with the holes of the outlet box. Reinstall the 2 outlet box screws securely. (Fig. 2-1)

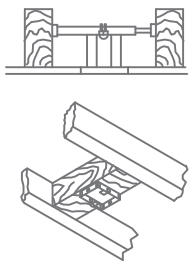

Fig. 2

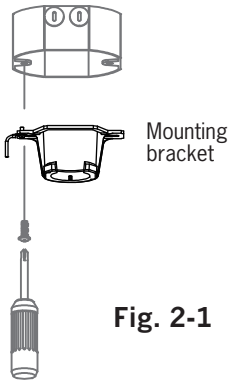

Fig. 2-1

© 2013 Monte Carlo Fan Company

Installation Instruction (Downrod Mount)

Partially loosen downrod set screws from yoke at top of motor assembly.
Remove keeper pin and cross pin from yoke, and save for later use.

Place downrod over canopy, thread lead wires and safety cable from motor assembly through downrod.

Slip downrod into motor housing yoke, aligning holes and install cross pin and keeper pin.
Insert cross pin through yoke and downrod until point appears on the other side, and insert keeper pin on cross pin.
Pull the downrod up tight against the cross pin, and then evenly tighten the downrod set screws on motor housing yoke. (Fig. 3)

Warning: Cross pin and keeper pin must be installed securely, failure to install them will result in serious injury.

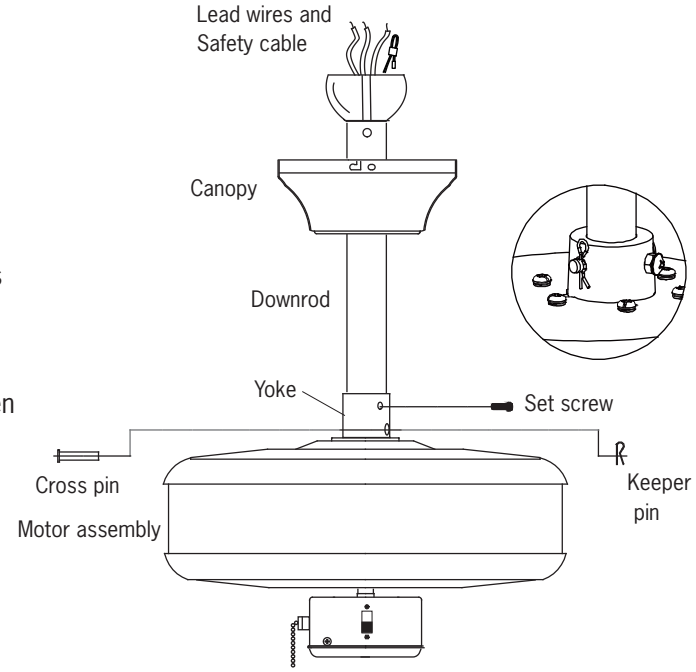

Fig. 3

Install ball end of downrod into mounting bracket opening. Align (engage) slot on ball with tab on mounting bracket.
Warning: Failure to align slot on ball with tab may result in serious injury. (Fig. 4)

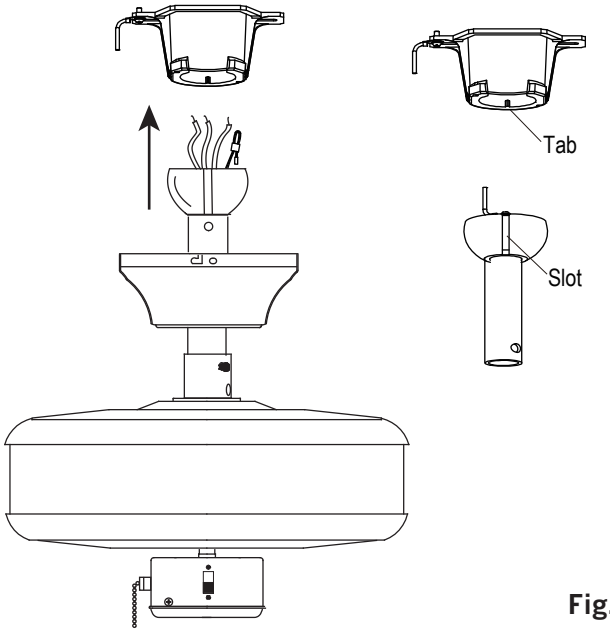

Fig. 4

© 2013 Monte Carlo Fan Company

Installation Instruction (Flushmount)

Remove and set aside canopy cover to reveal 6 holes. Notice that 3 of these holes are larger. (Fig. 5)

Thread lead wires and safety cable through canopy. Place canopy over yoke, aligning larger holes in canopy with the 3 existing screws on top of motor housing. Install 3 screws and 3 lock washers (these screws and lock washers will be located in the hardware pack) into the remaining holes. Tighten all screws securely. (Fig. 6)

To prepare the fan for wiring, hang fan onto mounting bracket by sliding the canopy over the mounting bracket hook (Use one of non-slotted holes on the rim of the canopy). (Fig. 7)

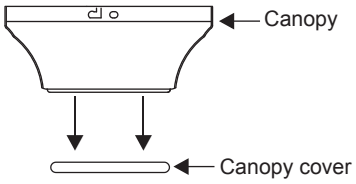

Fig. 5

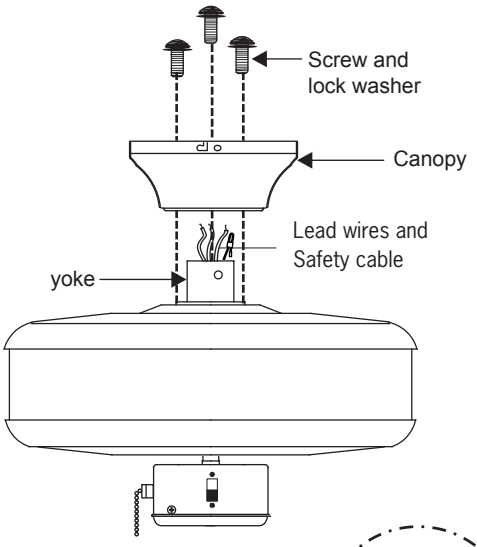

Fig. 6

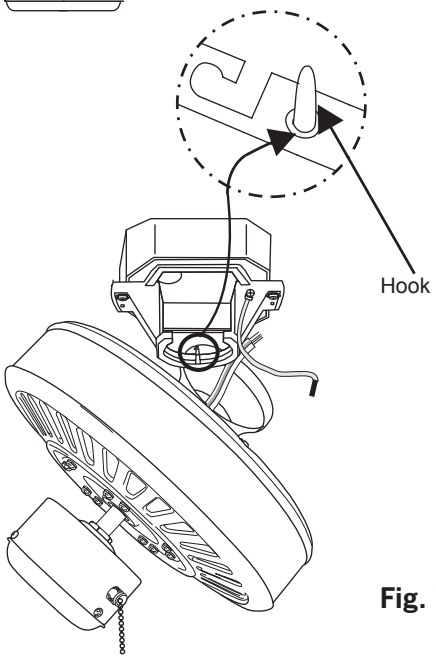

Fig. 7

Safety Cable Installation

For Canadian installation and for USA fan and light kit combinations over 35 lbs, in both flush and downrod modes the safety cable must be installed into the house structure beams using 3” lag screws, washers and lock washers provided. Make sure that when the safety cable is fully extended the lead wires are longer than the cable and no stress is placed on the lead wires. (Fig. 8)

Note: If Installing The Secondary Support Safety Cable in the U.S., Do Not Remove Knockouts In The Outlet Box.

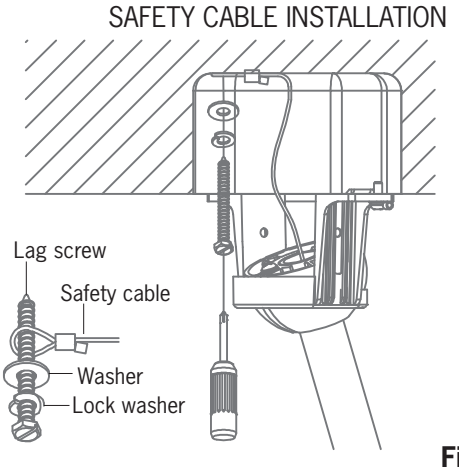

Fig. 8

© 2013 Monte Carlo Fan Company

Wiring

Warning: Make sure main power is turned off before making wiring.

Make wire connections as indicated. Connect Black and Blue wire from fan to Black (Hot) wire from house. Connect White wire from Fan to White (Neutral) wire from house. Connect all green grounded wires from fan to Grounded wire from House. Make sure that no filaments are outside of the wire connectors. (Fig. 9)

For control of fan and light separately from wall location, follow diagram as shown. (Fig. 9-1)

Note: A professional electrician is recommended for this type of installation.

Note: Wrap each wire connector separately with electrical tape as an extra safety measure.

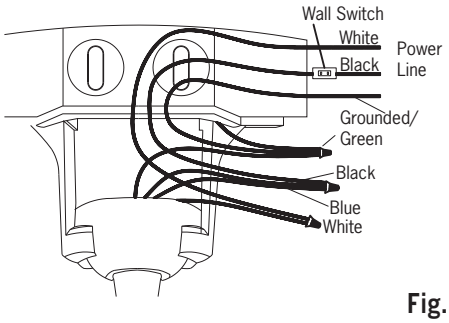

Fig. 9

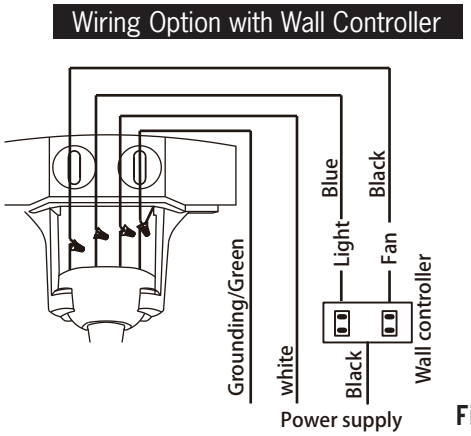

Fig. 9-1

Canopy Installation

Partially loosen 2 of the set screws on mounting bracket corresponding to the slotted holes on the canopy upper ring. Remove the other 2 set screws. Save screws.

Raise canopy to mounting bracket, aligning loosened screws in mounting bracket with slotted holes in canopy. Twist canopy to lock. Reinstall screws (with washers) that were previously removed and then tighten all screw securely. (Fig. 10, Fig. 10-1)

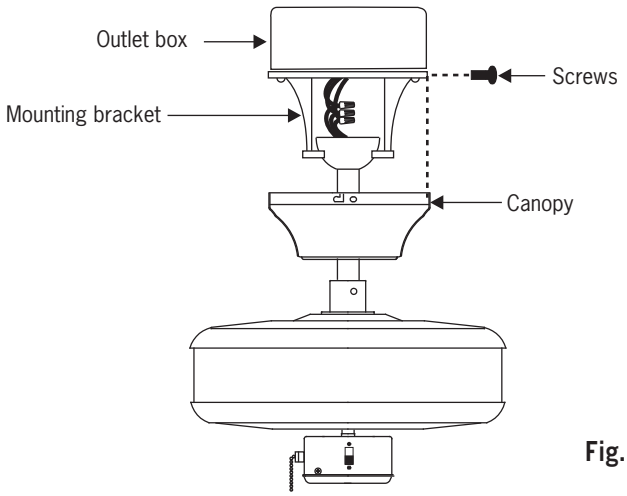

Fig. 10

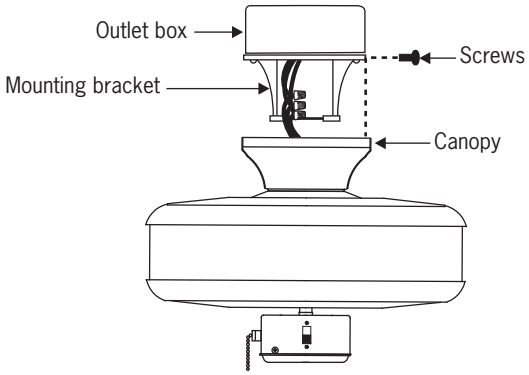

Fig. 10-1

© 2013 Monte Carlo Fan Company

Blade installation

Install blade bracket with blade by 3 blade screws and washers provided. Tighten screws securely. Repeat this process for remaining blades. (Fig. 11)

Remove shipping stabilizers from motor assembly. Install the blade assembly to motor using the preinstalled screws. Tighten screws securely. Repeat this process for remaining blade assemblies. (Fig. 11)

Note: Tighten blade bracket screws twice a year.

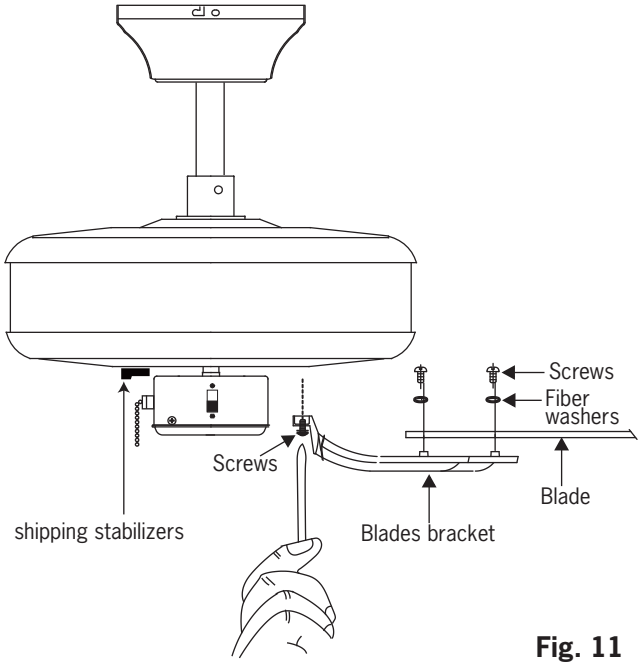

Fig. 11

Install fan pull chain to preassembled pull chain on fan. Pull chain provided. (Fig. 12)

Forward/Reverse switch setting

Setting the reverse switch in the down position will result in downward airflow and setting the switch in the up position will result in upward airflow.
Note: Reverse switch must be set either completely down or completely up for fan to function. If the reverse switch is set in the middle position, fan will not operate. (Fig. 12)

Operation and Maintenance

Refer to operation and maintenance on the second page of parts list.

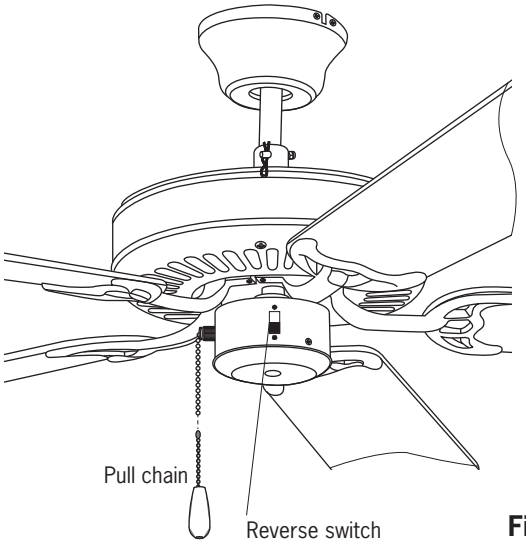

Fig. 12

© 2013 Monte Carlo Fan Company

Trouble Shooting

If you have difficulty operating your new ceiling fan, it may be the result of incorrect assembly, installation, or wiring. In some cases, these installation errors may be mistaken for defects. If you experience any faults, please check this Trouble Shooting Chart. If a problem cannot be remedied, or you are experiencing difficulty in installation, please call our Customer Service Center at the number printed on your parts list insert sheet.

Warning: Before servicing or cleaning unit, Switch power off at Service panel and lock service disconnecting means to prevent power from being switched on accidentally. When the service disconnecting means cannot be locked, securely fasten a prominent warning device, such as a tag, to the service panel.

Trouble	Suggested Remedy
1. If fan does not start:	1.Check main and branch circuit fuses or circuit breakers. 2.Check line wire connections to fan and switch wire connections in switch housing. **CAUTION**: Make sure main power is turned off. 3.If this fan uses manual forward/reverse switch, make sure the switch is pushed firmly either way. Fan will not operate when switch is in the middle. 4.If this fan uses remote controller, make sure dip switches are setting properly and make sure battery is effective.
2. If fan sounds noisy:	1.Check to make sure all screws in motor housing are snug (not over tightened). 2.Check to make sure the screws which attach the fan blade holder to the motor are tight. 3.Check to make sure wire nut connectors in switch housing are not rattling against each other or against the interior wall of the switch housing. **CAUTION**: Make sure main power is turned off before entering switch housing. 4.Check to be sure light bulb is tight in socket and not touching the glass shade. 5.Some fan motors are sensitive to signals from Solid State variable speed controls. 6.Allow "break-in" period of 24 hours. Most noises associated with a new fan will disappear after this period.
3. If fan wobbles:	1.If this is a downrod mount fan, make sure the ridge on mounting bracket engages the notch in the downrod ball. 2.Make sure that canopy, mounting bracket or mounting plate are tightened securely to ceiling junction box and junction box is mounted firmly to ceiling joist. 3.Check that all blades are screwed firmly into blade holders. 4.Check that all blade holders are tightened securely to motor. 5.Most fan wobble problems are caused when blade levels are unequal. Check this level by selecting a point on the ceiling above the tip of one of the blades. Measure this distance from blade tip to ceilng. Keeping measure within 1/8", rotate the fan until the next blade is positioned for measurement. Repeat for each blade. If all blade levels are not equal, you can adjust blade levels by the following procedure. To adjust a blade tip down, insert a washer (not supplied) between the blade and blade holder at the screw closest to the motor. To adjust a blade tip up, insert washer (not supplied) between the blade and blade holder at the two screws farthest from the motor. Reverse the position of the washer if blades mount from top of blade. 6.If blade wobble is still noticeable, interchanging two adjacent (side by side) blades can redistribute the weight and possibly result in smoother operation.
4. If light does not work:	1.Check blue wire from fan to make sure it is connected to hot wire from house. 2.Check for loose or disconnected wires in fan switch housing. 3.Check for loose or disconnected wires in light kit. 4.Check for faulty light bulb and make sure bulb is tight in socket. 5.Remove light kit and check the plug connections if they are present. 6.If this fan uses remote controller, make sure dip switches are setting properly and make sure battery is effective. **CAUTION**: Make sure main power is turned off before entering switch housing and/or canopy.

© 2013 Monte Carlo Fan Company

Mar. 2013
May.2013 CUL requirement