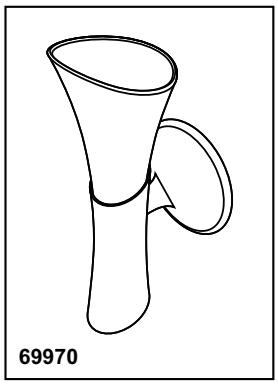

BRIZO®

ACCESSORIES

- RSVP™ Bath Collection
- Light

Submitted Model No.: _____

Specific Features: _____

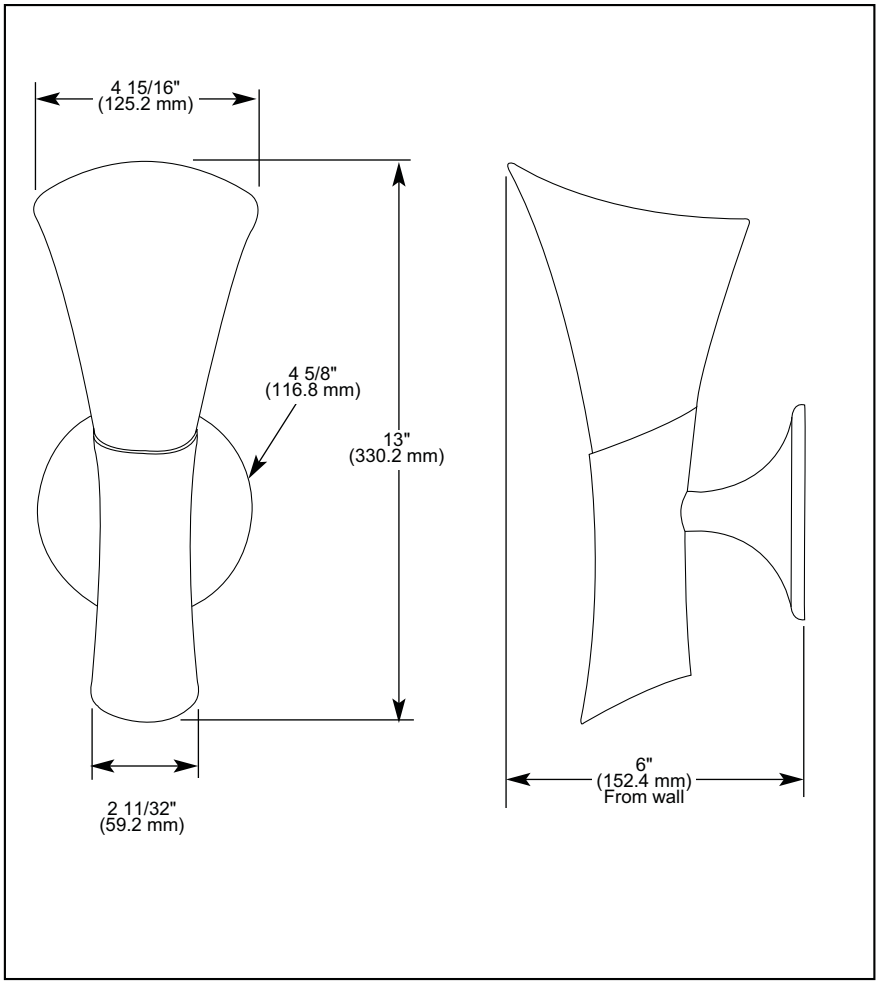

STANDARD SPECIFICATIONS:

- *Mounting hardware and mounting instructions included with product.*
- *Glass dome is satin etched.*
- *UL approved up to 60 watts.*
- *Uses C7 60 watt max. bulb in top outlet and C7 7 watt max. bulb in bottom outlet.*
- *Mounts on standard electrical box.*

WARRANTY

- *Lifetime Faucet and Finish Limited Warranty to the original consumer purchaser to be free from defects in material and workmanship.*
- *5 Year Limited Warranty for usage in all industrial, commercial and business applications.*

Delta reserves the right (1) to make changes in specifications and materials, and (2) to change or discontinue models, both without notice or obligation. Dimensions are for reference only. See current full-line price book for finish options and product availability.

BSP-A-69970 Rev. A

Delta Faucet Company
Indianapolis, Indiana 46280
A Division of Masco Corporation of Indiana
© 2007 Masco Corporation of Indiana