SPECIFICATION SHEET
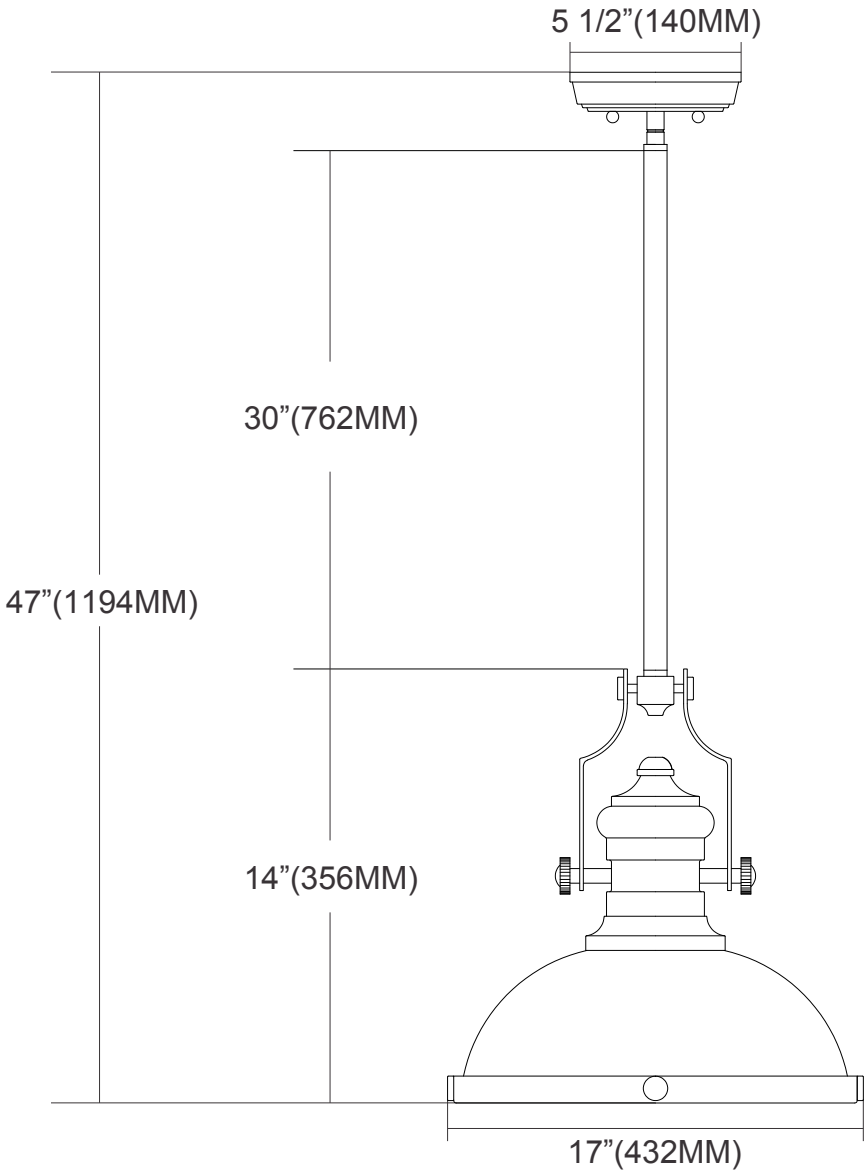
	ITEM TYPE	PENDANT
	WIDTH	17”(432MM)
	HEIGHT	14”(356MM)
	DEPTH	
	WEIGHT	9LBS (4KG)
	LAMP	(1)MEDIUM
	MAX WATTAGE	100W
	FINISH	POLISHED NICKEL
ITEM#: 66516-1	ROD LENGTH	30”(762MM) (1-6” 2-12”)
	ROD COLOR	POLISHED NICKEL