THOMAS LIGHTING

ITEM#: 5602BB/30

INSTALLATION INSTRUCTIONS

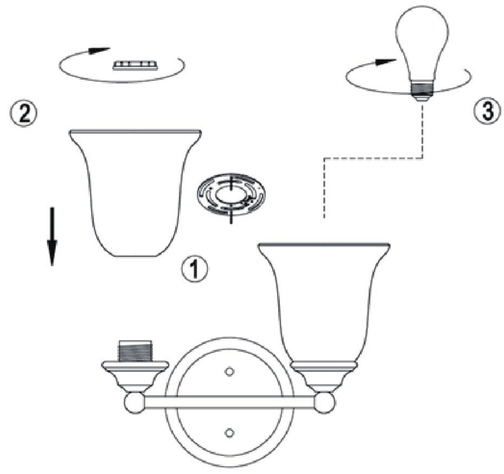

WARNING

DISCONNECT POWER AT THE MAIN FUSE BOX BEFORE INSTALLATION.

CONSULT A QUALIFIED ELECTRICIAN BEFORE INSTALLATION.

PREPARATION

Before assembly, be sure to remove all parts and part packages from box. If anything is missing, please contact the store or internet vendor from which product was purchased.

INSTALLATION

1. Connect wiring together and mount fixture to wall. (See other side for wiring and mounting instructions).
2. Attach glass to fixture using socket rings.
3. Install light bulbs. Use 60 watt max medium base bulbs (not included).

WIRING AND MOUNTING INSTRUCTIONS

2A

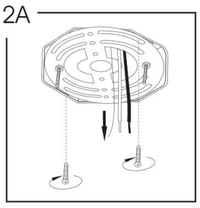

Carefully pull house wires through opening in center of mounting plate. With mounting plate threads facing outward, screw mounting plate into junction box using outlet box screws.

2B

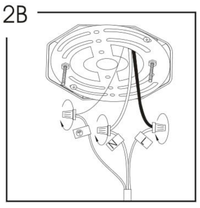

Strip 3/4" of insulation from wire ends. Connect house ground wire to fixture ground wire marked with symbol. Twist wires together using wire nut. Connect black house wire to the fixture wire marked "L". Twist wires together using wire nut. Connect white house wire to the fixture wire marked"N". Twist wires together using wire nut.

2C

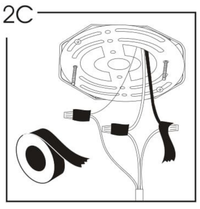

Tape wires and wire nuts together using electrical tape.

2D

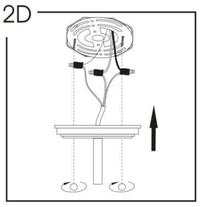

Lining up threads on mounting plate with holes in fixture canopy, attach fixture to junction box using cap nuts. Be sure to carefully tuck wires into canopy while attaching.

(Continue with step 3 of installation on other side.)