SYMMONS®
the smart choice™

Degas®

Tub-Shower Systems 5400, 5401, 5402 Series

Installation and Service Instructions

Model Number Series

5402..... Tub-Shower System
5402-X..... Valve includes stops
5402-TRM .... Trim only

5401..... Shower System
5401-X..... Valve includes stops
5401-TRM .... Trim only

5400..... Shower Valve System
5400-X..... Valve includes stops
5400-TRM .... Trim only

☎ Need Help?

Symmons customer service:
Phone: (800) 796-6667
gethelp@symmons.com

symmons.com/customer-service

- Technical help
- Product information
- Warranty policy

Visual Guide Degas Tub-Shower Systems, *5400, 5401, 5402 Series*

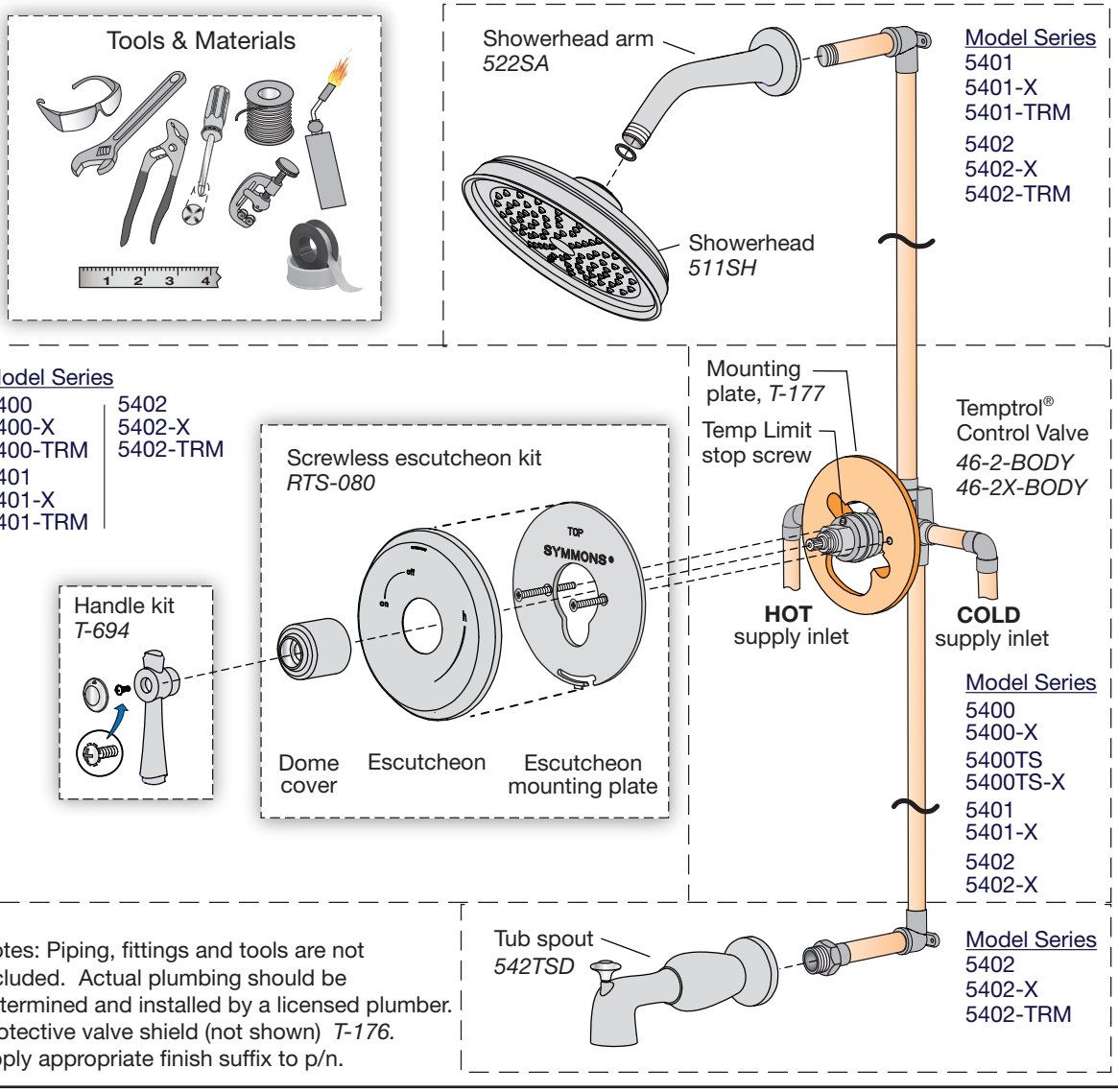

Notes: Piping, fittings and tools are not included. Actual plumbing should be determined and installed by a licensed plumber. Protective valve shield (not shown) *T-176.* Apply appropriate finish suffix to p/n.

⚠ **WARNING:** This product can expose you to chemicals including lead, which is known to the state of California to cause cancer, birth defects, or other reproductive harm. For more information, go to www.P65Warnings.ca.gov.

Installation Instructions

Rough-in Installation

Control valve assembly, piping and fittings (Note: *Illustrations below show valve model without stops)*

Reference as required: Page

Visual guide.....1
Dimensions illustration 4

1) Determine wall thickness

- Determine type of wall and wall thickness where valve will be mounted.
- Consider whether to use mounting plate by reviewing figure 2 below.
- Skip ahead to **Step 3** if mounting plate is not used.

2) Attach valve mounting plate

Seat mounting plate against valve assembly as illustrated in figure 1.

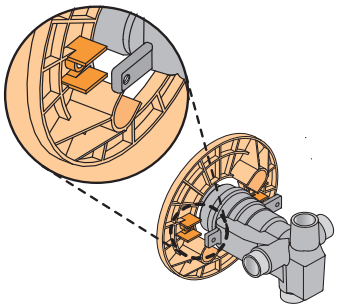

Figure 1 *Mounting plate*

3) Attach protective shield

- Reference figure 2 to determine whether shield is required.
- Attach protective shield by snap fitting over end of valve spindle.

4) Install piping, fittings and control valve

Piping and fittings not supplied

- **Control Valve**
  Install through cutout hole in wall as specified in figure 2 below and dimension illustration on page 4.
- **Showerhead (S on valve)**
  Pipe from outlet port on valve marked **S** to showerhead mounting arm location.
- **Hot & Cold Supply (H & C)**
  Pipe hot water supply to valve inlet marked **H** and cold water supply to valve inlet marked **C**.
- **Tub Spout (T on valve)**
  Pipe from outlet port on valve marked **T** to tub spout.

Important! Do not substitute Tub Spout with restrictive fittings such as PEX, CPVC or outlet accessories such as a ledge spout, hose and spray that would subject the valve to excessive internal back pressure, otherwise operation will be compromised.

5) Remove protective shield

If protective shield was attached in **Step 3** then remove shield snap fitted over the end of valve spindle once valve is securely installed and wall finish work has been completed.

6) Adjust valve packing nut

Reference figure 3 below

- Turn hot & cold supplies on. Valve will not operate unless both hot and cold water supply pressures are turned on.
- Place handle over end of *control spindle stem*.
- Adjust *packing nut* for positive frictional resistance as handle is rotated from shutoff position across adjustment range.

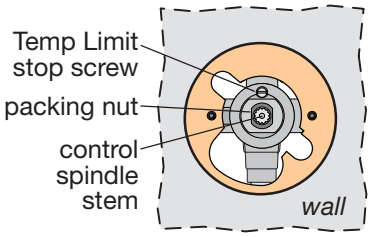

Figure 3 *Valve adjustments*

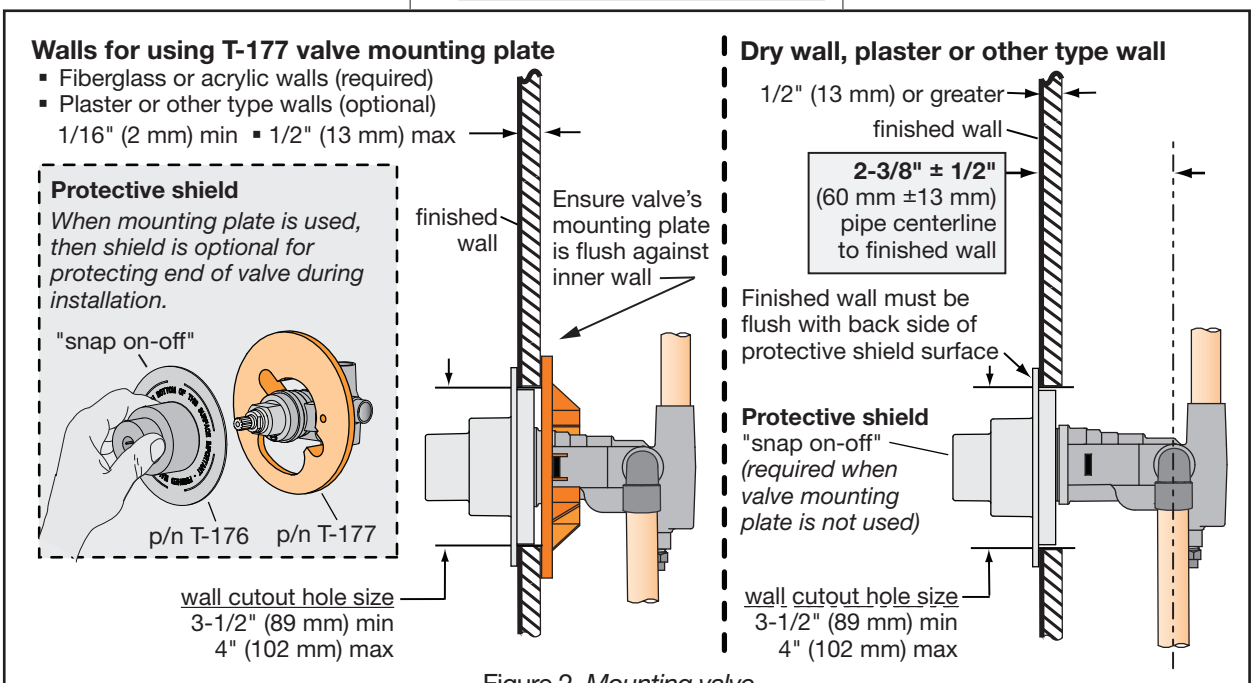

Figure 2 *Mounting valve*

7) Flush system, check for leaks

- Turn valve to the warm position and run for a few minutes.
- If system is dirty, remove valve spindle in center of valve to ensure proper flushing. (See service instructions.)
- Check for leaks around valve assembly and all pipe fittings.

8) Set Temp Limit stop screw

Reference page 2, figure 3

The temperature limit stop screw limits valve handle from being turned to maximum position resulting in excessive hot water discharge temperatures.

Warning: Failure to adjust *Temp Limit stop screw* properly may result in serious scalding.

- Place handle on *control spindle stem* and open valve to maximum desired temperature.
- Turn *Temp Limit* stop screw clockwise until it seats.

Note: Do not install positive shut-off devices on control valve outlet or devices that do not allow the valve to flow at least 1.5 gpm.

Trim Installation

1) Attach escutcheon mounting plate

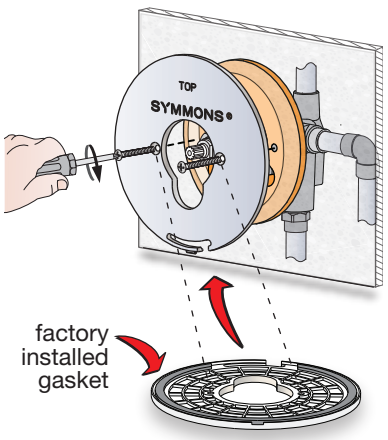

2) Attach escutcheon

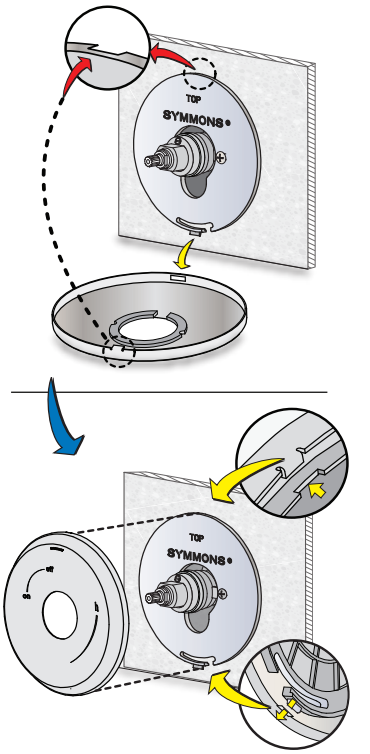

3) Attach dome cover

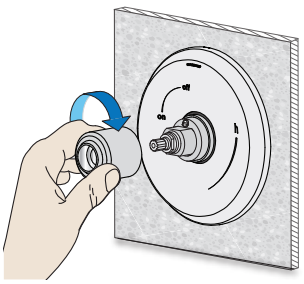

4) Attach handle

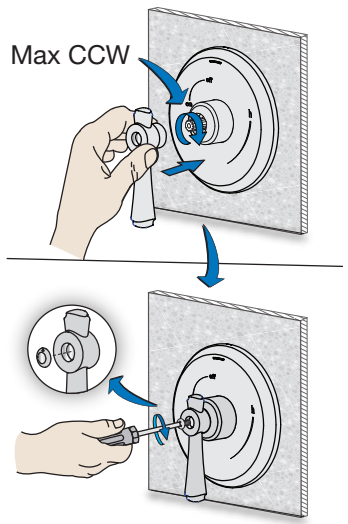

5) Attach showerhead

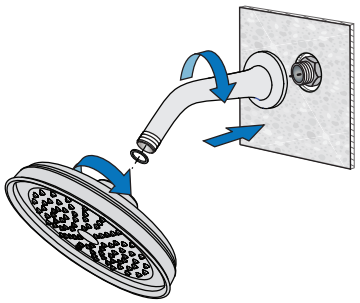

6) Attach tub spout

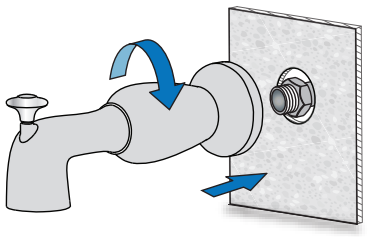

Tub-Shower Operation

Control handle

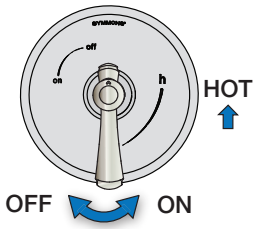

Showerhead mode selection

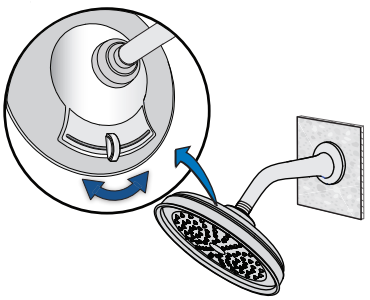

Care and Cleaning

Clean finished area using mild soap and water or a non-abrasive cleaner and then quickly rinse. A non-abrasive wax may be used to preserve finish area.

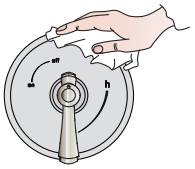

Dimensions Degas Tub-Shower Systems, *5400, 5401, 5402 Series*

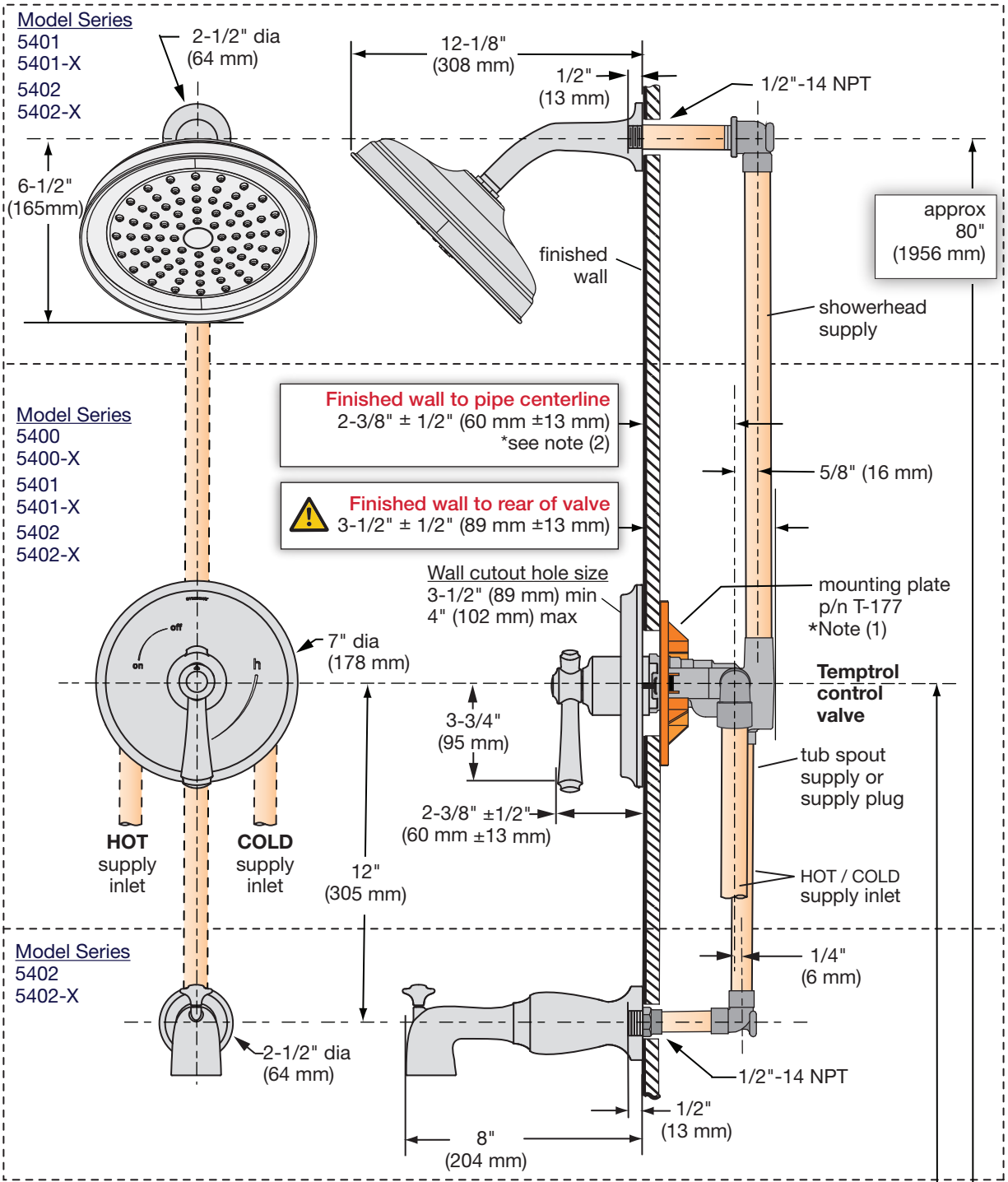

*** Notes:** *(also reference page 2, figure 2 for details)*

(1) Walls for using T-177 mounting plate (MP)
- Wall is 1/16" (2 mm) min • 1/2" (13 mm) max
- Fiber or acrylic walls (MP is required)
- Plaster or other type walls 1/2" or less (MP optional)
- Protective shield usage (optional for protection only)

(2) Dry wall, plaster or other type walls 1/2" or greater
- Protective shield attached to valve spindle to locate position

(3) Dimensions subject to change without notice

Protective shield p/n T-176

approximately
Shower only = 48" (1219 mm)
Tub-Shower = 32" (813 mm)

Floor

Parts Assembly Temptrol Shower & Tub-Shower Control Valves

- 46-2-BODY.....Shower valve, Tub-Shower valve
- 46-2X-BODY.....Shower valve w/stops, Tub-Shower valve w/stops

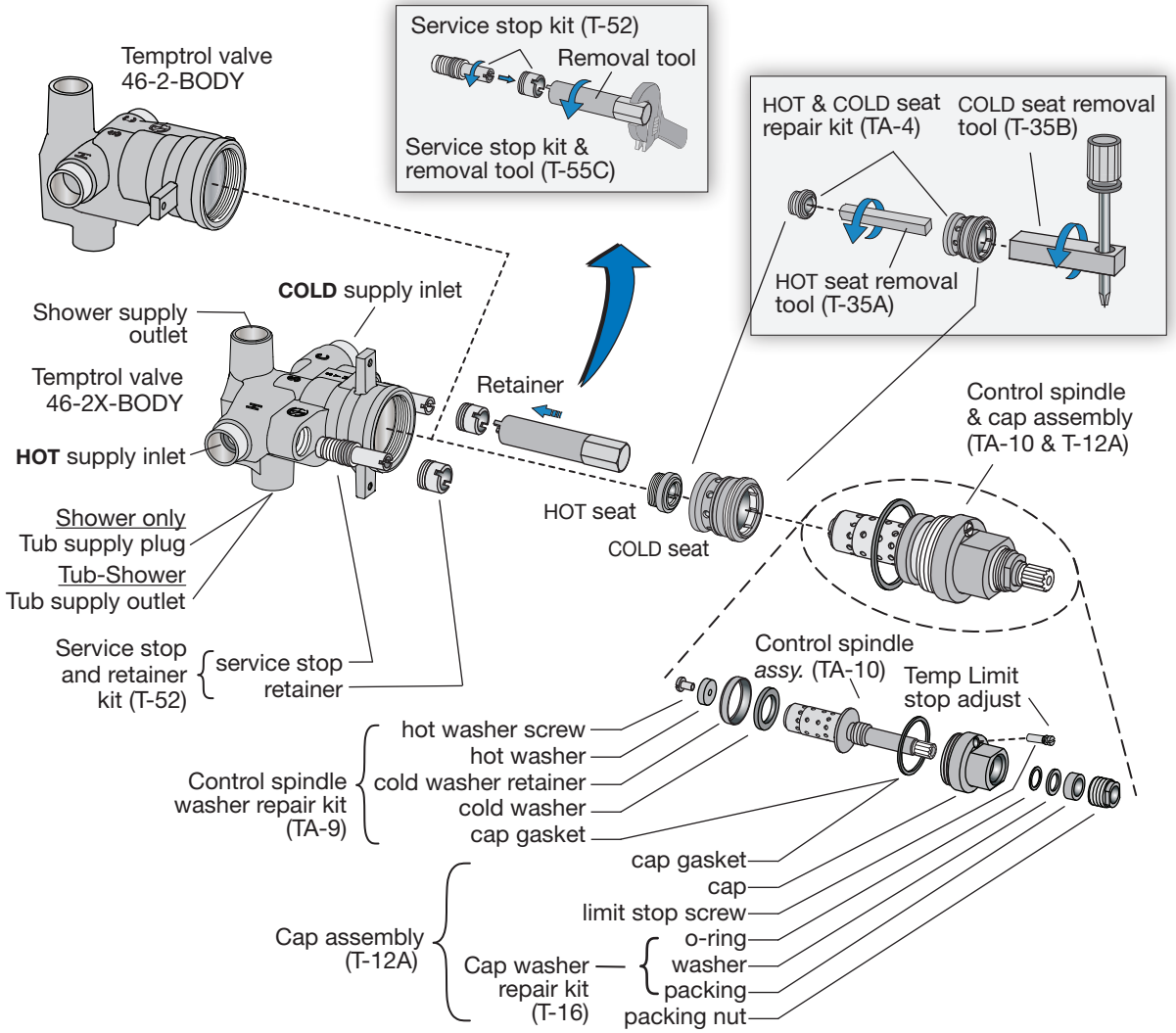

Temptrol Valve Replacement Parts and Optional Tools

Symmons Part Number	Valve Body Type		Description
	46-2-BODY	46-2X-BODY	
TA-4	√	√	HOT & COLD seat repair kit.....*(optional tool p/n T-35A/B)*
TA-9	√	√	Control spindle washer repair kit
TA-10	√	√	Control spindle.....*(includes p/n TA-9 & T-16 components)*
T-12A	√	√	Cap assembly
T-16	√	√	Cap washer repair kit
T-35A/B	√	√	HOT seat removal tool, T-35A & COLD seat removal tool, T-35B
T-52		√	Service stop spindle & retainer
T-55C		√	Service stop spindle, retainer & removal tool
T-108	√	√	Reverse seat & tool kit *(valve HOT & COLD supply inputs are reversed)*

Trouble Shooting Chart

Problem	Cause	Solution
Valve will not pass water.	Both hot and cold water supplies are not turned on.	Turn on both supplies. Valve will not operate unless both hot and cold water pressure is on.
Valve leaks when shut off.	Hot and cold washers are worn or foreign matter (dirt, chips) is lodged between washers and seat surfaces.	1) Replace washers using *control spindle washer repair kit*, p/n TA-9. 2) Replace hot & cold seats using *hot/cold seat repair kit*, p/n TA-4.
Temperature control handle is turned from cold to hot (or hot back to cold) and volume from spout or head is not constant.	Pressure-balancing piston housed in spindle assembly is restricted from free movement by foreign matter.	1) Open valve halfway, remove handle and tap spindle with plastic hammer. 2) Check *water pressure balancing piston* in *control spindle*. See service instructions. 3) Replace *control spindle*, p/n TA-10.
Valve delivers sufficient quantity of cold, but little hot, or the reverse.	Same as above	Same as above
Temperature varies without moving handle.	Same as above	Same as above
Valve delivery temperature reduces gradually during use; handle must be turned to hotter positions to maintain constant temperature.	Overdraw on hot water supply (i.e. running out of hot water).	Reduce maximum flow by using volume control adjustment on valve or showerhead. This will allow longer period of use before overdrawing hot water supply.
Valve delivers hot water when initially opened. Water turns colder as handle is rotated in a counter-clockwise direction toward the hot position.	Valve is piped incorrectly (i.e. the hot supply is piped to the valve's cold inlet and the cold supply is piped to the hot inlet.)	If piping is accessible, correct connections to the valve. If piping is not accessible, order a *reverse seat and tool kit*, p/n T-108. Older installations may also require replacing the hot seat, *hot/cold seat repair kit,* p/n TA-4.

Service Instructions

Removing control spindle assembly
(Ref. parts assembly figure)

- Shut off water supply to valve and remove control valve handle and dome cover.
- Remove escutcheon plate by first removing escutcheon screws.
- Turn valve's *control spindle* to half way position between minimum and maximum rotation.

Important: Failure to do this can damage *control spindle assembly*.

- Unscrew both *spindle cap* and *control spindle assembly.*

Hot/Cold seat repair kit
Order p/n TA-4, T-35A and T-35B.

Installation requires both hot & cold removal tools, p/n T-35A & T-35B.

- Remove *control spindle assembly*.
- Remove both seats with removal tools.
- Replace both seats even if only one appears worn.
- Install and tighten both seats to 15 foot pounds of torque.

Control spindle washer repair kit
Order p/n TA-9.

- Remove *control spindle assembly.*
- Remove *cold washer* by holding spindle using valve handle and unscrew *cold washer retainer* using channel lock pliers.
- Remove *hot washer* by removing *hot washer screw*.

Checking water pressure balancing piston

The perforated end of the *control spindle assembly* houses the water pressure-balancing piston which is the heart of the valve.

- Remove *control spindle assembly*.
- Shake spindle assembly and listen for clicking noise. Piston should be free to slide back and forth the full length of its travel.
- If piston appears restricted then do the following:
  (1) Tap the handle or stem end of the spindle against a solid object to free the piston.
  (2) Try soaking in household vinegar and repeat step (1).
- If unable to free piston, replace *control spindle, p/n TA-10.*

Important: Do not attempt removal of the piston.

Valve re-assembly

Reassemble by reversing above procedures.

After the *control spindle assembly* (TA-10) is threaded back into the spindle cap assembly (T-12A) ensure *control spindle* is rotated 1/2 turn clockwise from its maximum counter clockwise rotational position. Failure to do this will damage assembly.

Symmons Industries, Inc. ▪ 31 Brooks Drive ▪ Braintree, MA 02184 ▪ Phone: (800) 796-6667 ▪ Fax: (800) 961-9621
Copyright © 2018 Symmons Industries, Inc. ▪ symmons.com ▪ gethelp@symmons.com ▪ ZV-1081 REV C ▪ 080118