**Logis**
**Toilet Brush with Holder**
Finishes : **chrome** Part no. : **40522000**

## Description

**Features**

- Metal holder
- Brass, Crystal glass
- Wall-mounted

## Item details

## Product image

## Scale drawing

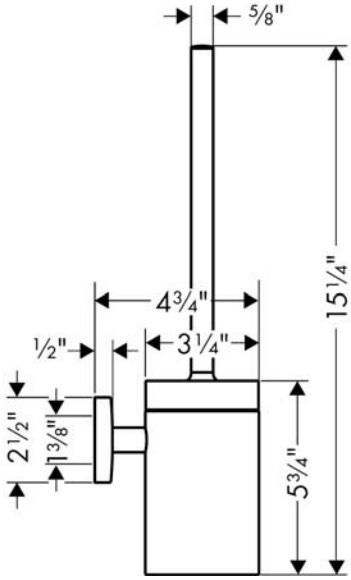

**Logis**
**Toilet Brush with Holder**
Finishes : **chrome** Part no. : **40522000**

## Exploded drawing

Year of production: **>09/08**

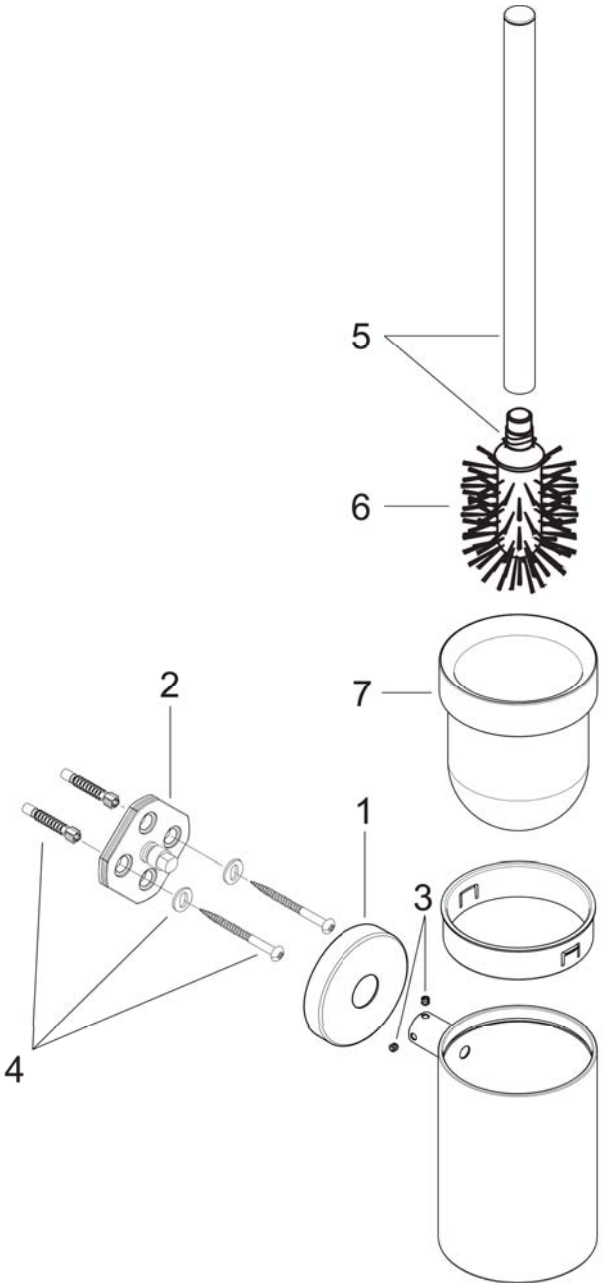

**Logis**
**Toilet Brush with Holder**
Finishes : **chrome** Part no. : **40522000**

## Spare parts list

Year of production: **>09/08**

| Pos. | Description | Part no. | Price | PU |
|---|---|---|---|---|
| 1 | escutcheon | 98538000 | - | 1 |
| 2 | support element | 98539000 | - | 1 |
| 3 | hollow set screw M4x4 | 98540000 | - | 1 |
| 4 | mounting set | 96179000 | - | 1 |
| 5 | stick with brush | 95577000 | - | 1 |
| 6 | WC-brush black | 40068000 | - | 1 |
| 7 | glass cup on its own | 98548000 | - | 1 |