Metris C
Single-Hole Faucet 100, 1.2 GPM
Finishes : **rubbed bronze** Part no. : **31077921**

Description

Features

- Aerated spray
- Flow: 1.2 GPM (4.5 L/Min)
- Ceramic cartridge

Item details

List Price

Technology

Eco Right
Quick Clean
Comfort Zone

Compliance

ADA
UPC
WaterSense Meets EPA Criteria

Product image

Scale drawing

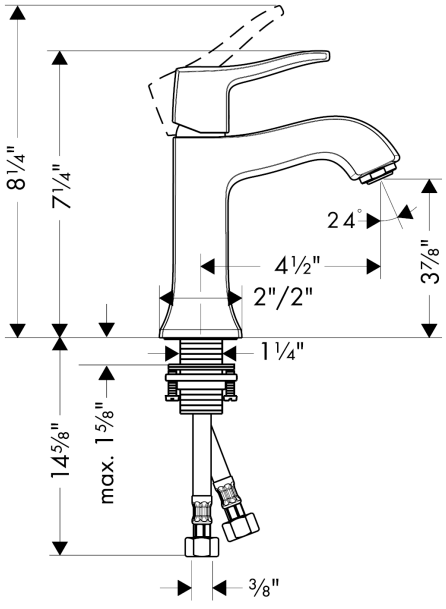

Metris C
Single-Hole Faucet 100, 1.2 GPM
Finishes : **rubbed bronze** Part no. : **31077921**

Exploded drawing

Year of production: **>07/16**

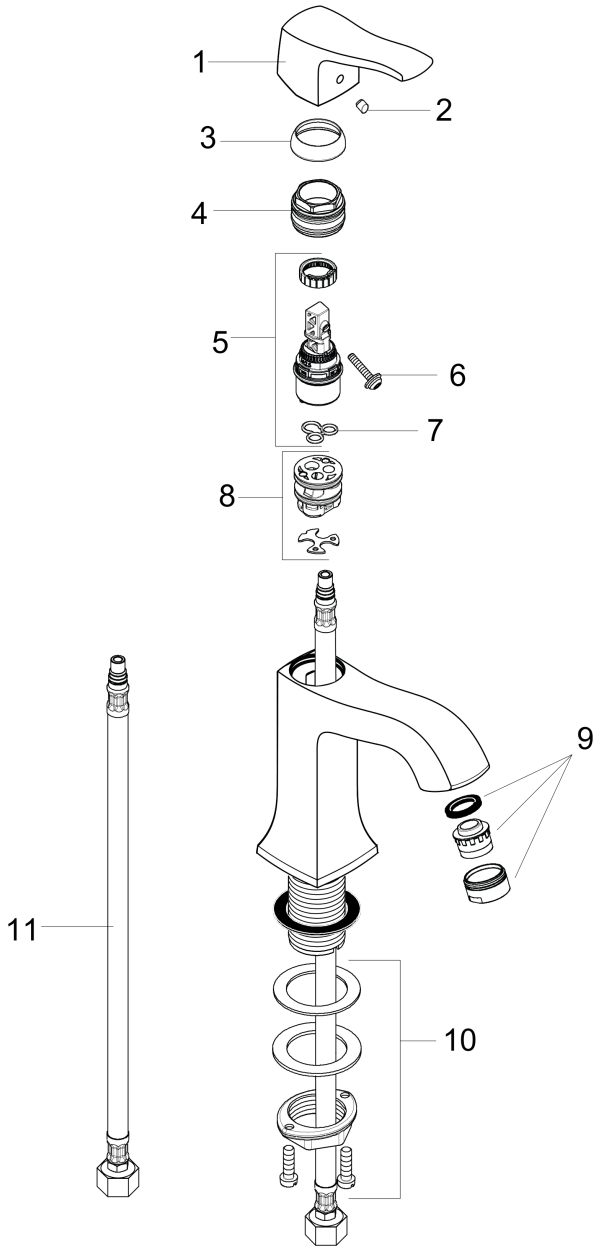

Metris C
Single-Hole Faucet 100, 1.2 GPM
Finishes : **rubbed bronze** Part no. : **31077921**

Spare parts list

Year of production: **>07/16**

Pos.	Description	Part no.	Price	PU
1	handle	31291920	-	1
2	screw cover	96338000	-	1
3	flange	98863920	-	1
4	nut	98864000	-	1
5	cartridge, assy	95973001	-	1
6	locking screw for handle	95140000	-	1
7	seal	98865000	-	1
8	adapter for cartridge	98866000	-	1
9	aerator M24x1 (4,5 l/min)	92877920	-	1
10	fixing set (Ø 32)	13961000	-	1
11	connection hose 18½" M8x0,75 3/8"	96321001	-	1