hansgrohe

Clubmaster
Showerhead 3-Jet, 2.5 GPM
Finishes : **polished brass** Part no. : **28496931**

Description

Features

- 72 no-clog spray channels
- Spray modes: Full, Pulsating Massage, Soft spray
- Flow: 2.5 GPM (9.5 L/Min)

Item details

Technology

Quick Clean

Compliance

UPC C ®

Product image
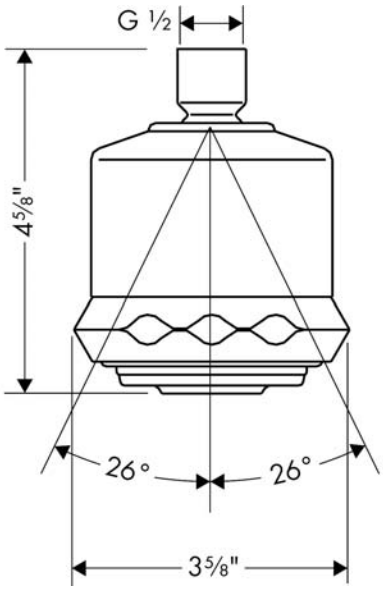
Scale drawing