hansgrohe

Croma
Showerhead 220 1-Jet, 2.0 GPM
Finishes : **brushed nickel** Part no. : **26478821**

Description

Features

- 107 no-clog spray channels
- Spray modes: RainAir
- Flow: 2.0 GPM (7.6 L/Min)
- Fully-finished matching spray face

Item details

Technology

Air Power
Eco Right
Quick Clean

Compliance

UPC C ®
WaterSense Meets EPA Criteria

Product image

Scale drawing

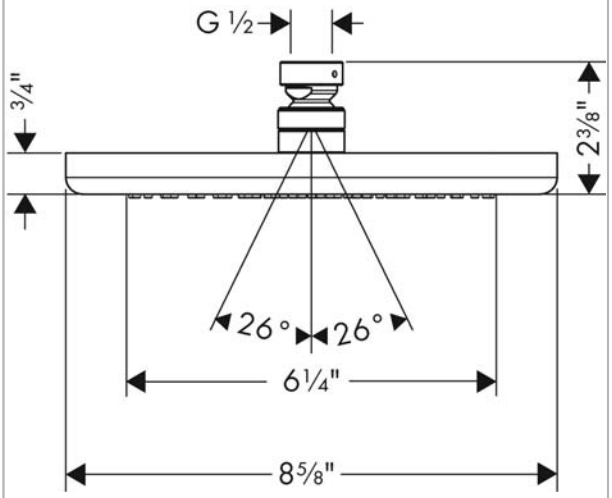

Croma
Showerhead 220 1-Jet, 2.0 GPM
Finishes : **brushed nickel** Part no. : **26478821**

Exploded drawing

Year of production: **>11/14**

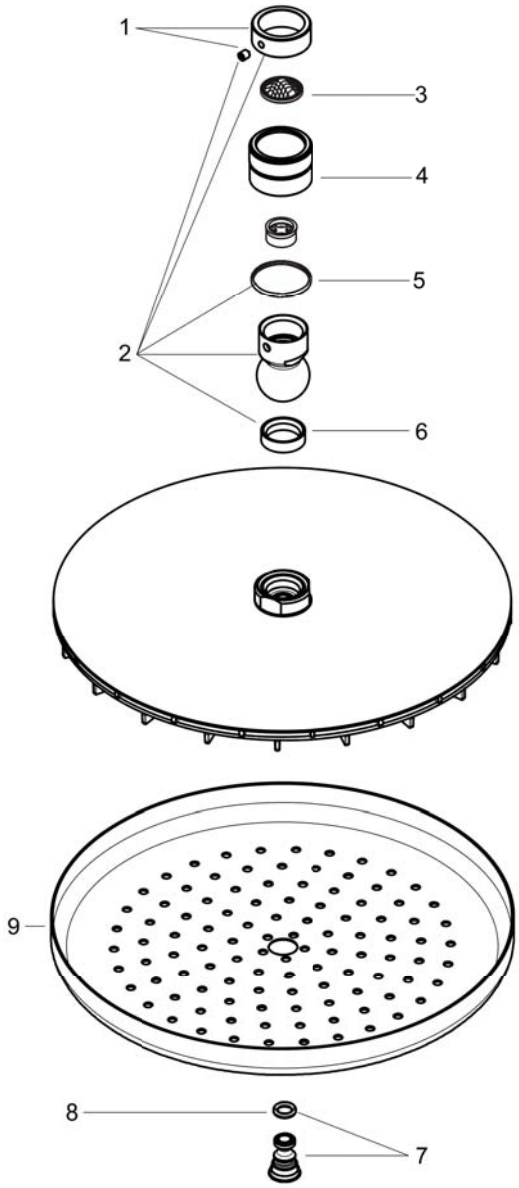

Croma
Showerhead 220 1-Jet, 2.0 GPM
Finishes : **brushed nickel** Part no. : **26478821**

Spare parts list

Year of production: **>11/14**

Pos.	Description	Part no.	Price	PU
1	lock washer	98942820	-	1
2	ball joint	98941820	-	1
3	filter packing	94246000	-	1
4	nut	97958820	-	1
5	lever collar	97536000	-	1
6	seal	97606000	-	1
7	air jet (Eco)	95795820	-	1
8	O-ring 7x2	98419000	-	1
9	spray body	92882000	-	1