NOTES:

(N1) 1. FIT / FORM / FUNCTION SHALL FOLLOW PS-E.008.

△2. APPLY 50-60 LB-IN OF TORQUE

△3. APPLY LIGHT FILM OF DOW CORNING III SILICONE COMPOUND

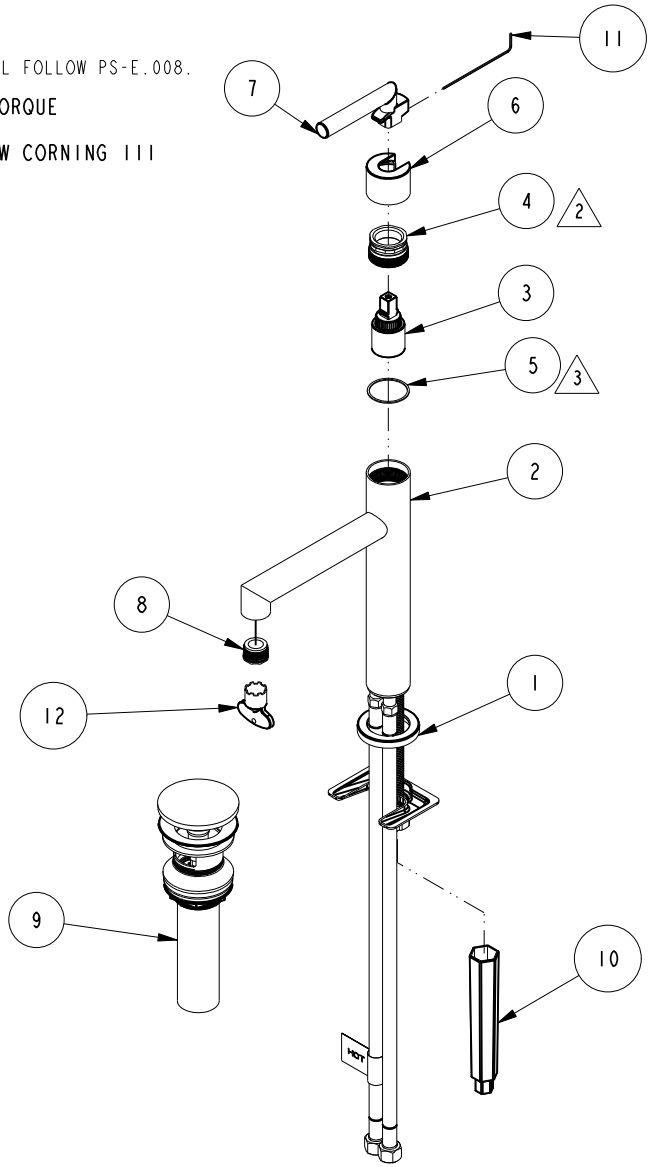

BILL OF MATERIAL (CURRENT LEVEL)

ITEM	PT/ASSY	DESCRIPTION	TYPE	QTY.
1	2-923	ESCUTCHEON ASM	ASSEMBLY	1
2	3-455	SPOUT ASM	ASSEMBLY	1
3	1-242	CARTRIDGE 25 MM KCG K025a	PART	1
4	1-297	RETAINER NUT ASM	ASSEMBLY	1
5	91635	WASHER	PART	1
6	2-924	CAP ASM	ASSEMBLY	1
7	2-925	HANDLE ASM	ASSEMBLY	1
8	12407	CACHE AERATOR INSERT, TINY Jr. SIZE, 1.2 GPM	PART	1
9	330	DRAIN, PUSH DOWN, W/ OVERFLOW	ASSEMBLY	1
10	92297	INSTALLATION TOOL, WRENCH	PART	1
11	92872	HEX KEY, 0.05" ALLOY STEEL	PART	1
12	91571	AERATOR KEY	PART	1

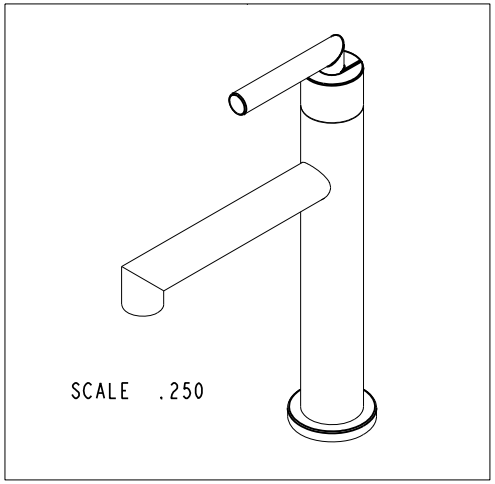

Cesar Gayosso

Digitally signed by Cesar Gayosso
DN: cn=Cesar Gayosso, o, ou, email=cgayosso@brasstech.com, c=US
Date: 2018.09.28 10:29:49 -07'00'

ZONE	REV	DESCRIPTION	DATE	APPROVED
-	E	EN-3718	09/28/18	C.G.
-	D	EN-3601	05/07/18	V.V.
-	C	EN-3439	10/30/17	J.M
-	B	EN-2896c	05/24/16	J.A
-	A	EN-2643	01/15/16	J.M
-	-	EN-2474	05/20/13	-

COPYRIGHT 2005 BRASSTECH, INC. THESE DRAWINGS AND THE DESIGNS DEPICTED HEREIN ARE THE PROPRIETARY PROPERTY OF BRASSTECH. ANY USE OR REPRODUCTION IS SUBJECT TO THE EXPRESS APPROVAL OF BRASSTECH. UNAUTHORIZED USE IS STRICTLY PROHIBITED. ALL RIGHTS RESERVED.

TESTING	-	-	-
ASSEMBLY	-	-	-
PLATING	-	-	-
POLISHING	-	NEXT ASSY	USED ON
MACHINING	-	APPLICATION	
TOOLING FIXTURE #		REMOVE ALL BURRS AND SHARP EDGES	

UNITS ARE: INCHES [MM]
TOLERANCES ARE:
FRACTIONS ±1/16" DECIMALS .X ±.1 [2.5] .XX ±.06 [1.5] ANGLES ±1°
(X.XXX) DENOTES CRITICAL DIMS.
ALL THREADS ARE CRITICAL

DRAWN	AMARISH	05/24/16
CHECKED	JINSON	05/24/16
APPROVED	J.A	05/24/16

BRASSTECH INCORPORATED
2001 CARNEGIE AVE.
SANTA ANA, CA 92705
(949) 417-5207

KEATON - SINGLE HOLE FAUCET

DWG NO. 2493 REV E

SCALE .175 REF. - SHEET 1 OF 2

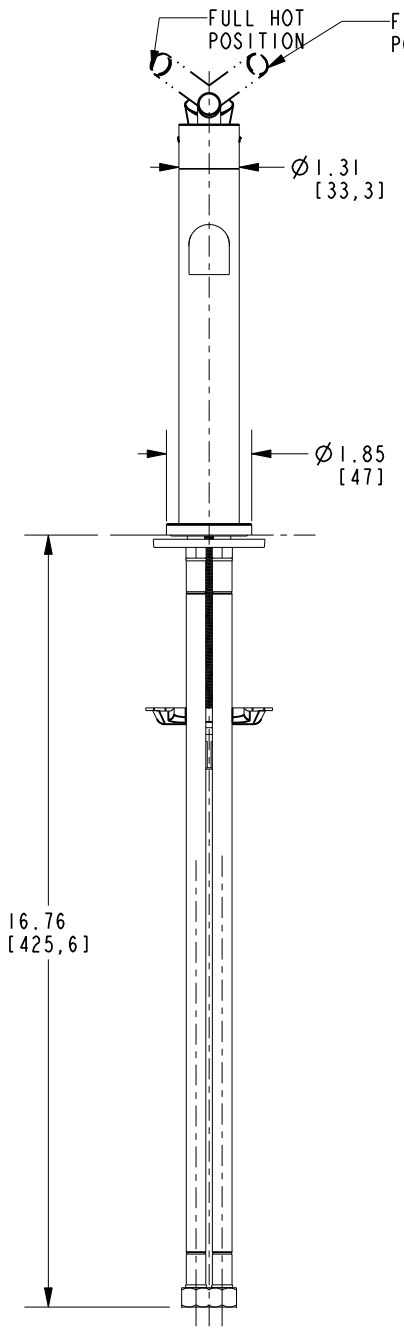

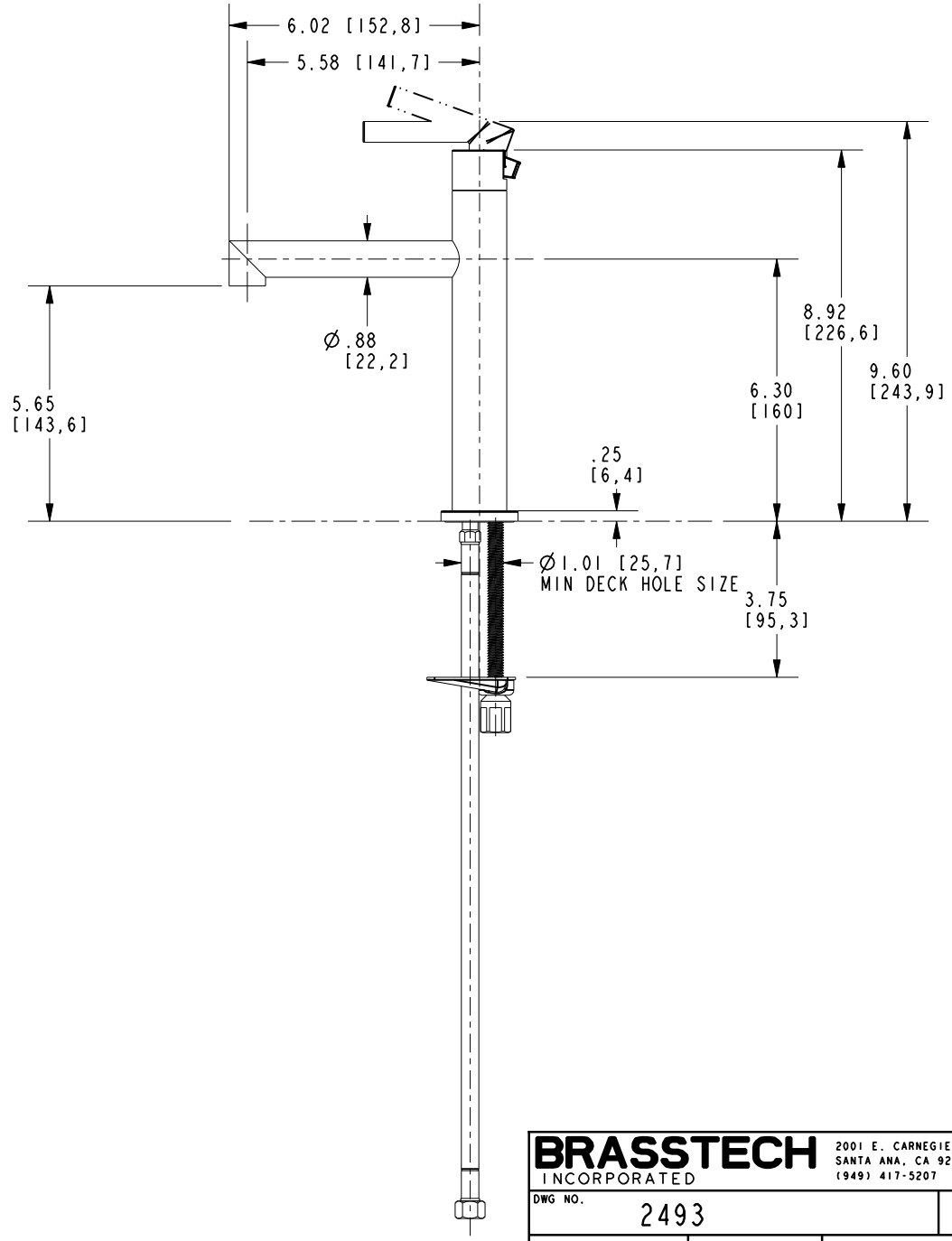

BRASSTECH INCORPORATED
2001 E. CARNEGIE AVE.
SANTA ANA, CA 92705
(949) 417-5207

DWG NO.	REV
2493	E

SCALE	REF.	SHEET
.240	-	2 OF 2