ESSENCE
Single-Hole Single-Handle Vessel Bathroom Faucet XL-Size
MODEL # 23538ENA

Pure Freude an Wasser

GROHE

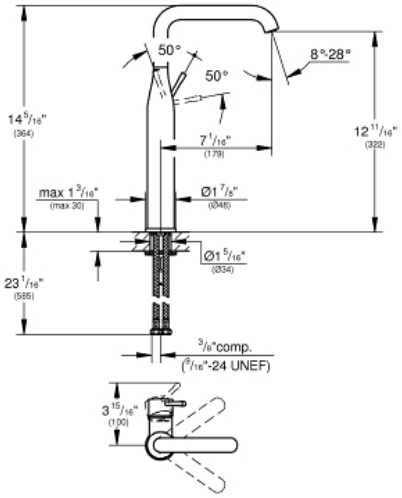

Product Description:
ESSENCE
Single-Hole Single-Handle Vessel Bathroom Faucet XL-Size

Standard Specification:
- Single hole installation
- **GROHE SilkMove** 1.1" (28 mm) ceramic cartridge
- With temperature limiter
- **GROHE AquaGuide** adjustable flow control
- **GROHE EcoJoy** Mousseur 1.2 gpm
- **GROHE StarLight** finish
- Swivel Spout
- With stop restriction
- Smooth body
- Metal lever handle

Applicable Codes & Standards:
- Energy Policy Act of 1992
- NSF 61
- ASME A112.18.1/CSA B125.1
- US Federal and State material regulations
- EPA WaterSense®
- ICC/ANSI A117.1

Color:
❑ 23538ENA Brushed Nickel