UTTERMOST

22869

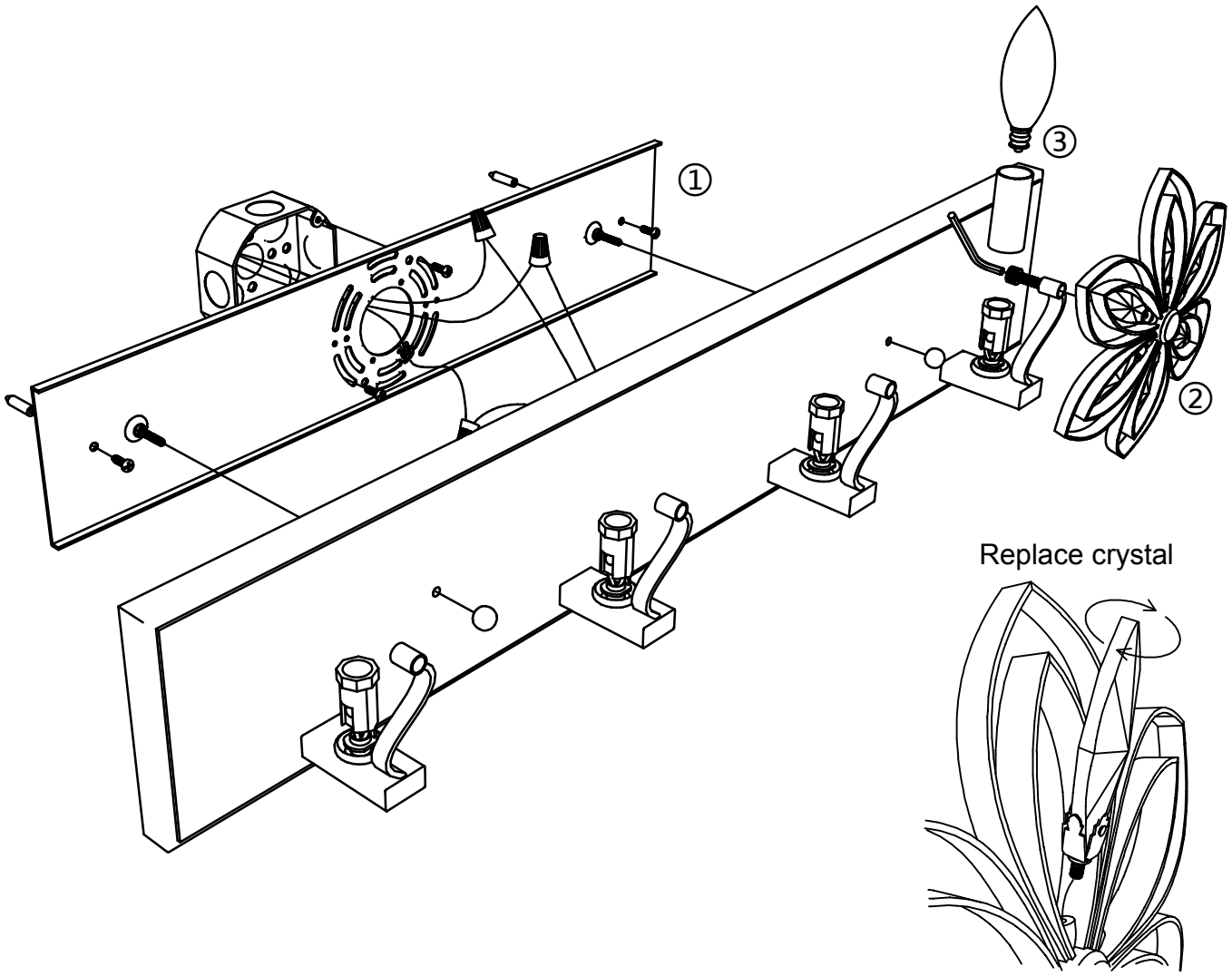

ASSEMBLY INSTRUCTIONS

1. Mount the fixture on the wall and connecting the wires refer the next page.
2. Attach crystal frame on the arm with screw and allen key.
3. Install candle sleeve and bulbs. (Please do not exceed the maximum capacity recommended on the socket.)

PO BOX 558/3325 GRASSY HILL RD. ROCKY MOUNT, VIRGINIA 24151
www.uttermost.com

UTTERMOST

INSTALLATION INSTRUCTIONS FOR WALL MOUNT FIXTURE

NOTE: ALWAYS TURN POWER OFF BEFORE INSTALLING LIGHTING FIXTURES!

IMPORTANT: YOU SHOULD USE A QUALIFIED ELECTRICIAN TO INSTALL THIS FIXTURE.

Installation (see Fig.A)

1. Disconnect power at main electrical panel before installation.
2. Pull Supply Wires through larger hole in mounting plate (hole has smooth edge).
3. Attach Mounting Plate to Outlet Box using Box Screws provided with Outlet Box. For additional stability on longer fixtures, install Mounting Screws into appropriate Fasteners (Fasteners not provided).
4. Follow wiring instructions carefully (listed below).
5. Position Coverplate over Mounting Plate, alligning Studs with Coverplate holes and secure with Ballnuts.

Wiring (see Fig.B)

1. Split the conductors of the **fixture wire** about 4 inches. Being careful not to expose any of the wire inside of the insulation.
2. Connect the **fixture ground wire** to the **outlet box ground wire** using **wirenut** (not provided). Connect **outlet box ground wire** to **mounting plate** with GREEN hex-head **ground screw** to tapped hole in **mounting plate** marked "GND".
3. Connect the half of the **fixture wire** that is white, marked, or has a ribbed surface to the **outlet box supply wire** (WHITE). Connect the other half of the **fixture wire** that is black, unmarked, or has a smooth surface to the **outlet box supply wire** (BLACK or RED). Use **wirenuts** provided.
4. Spread the electrical splices so that the black wire are on one side of the **outlet box** and the white wire are on the other side.

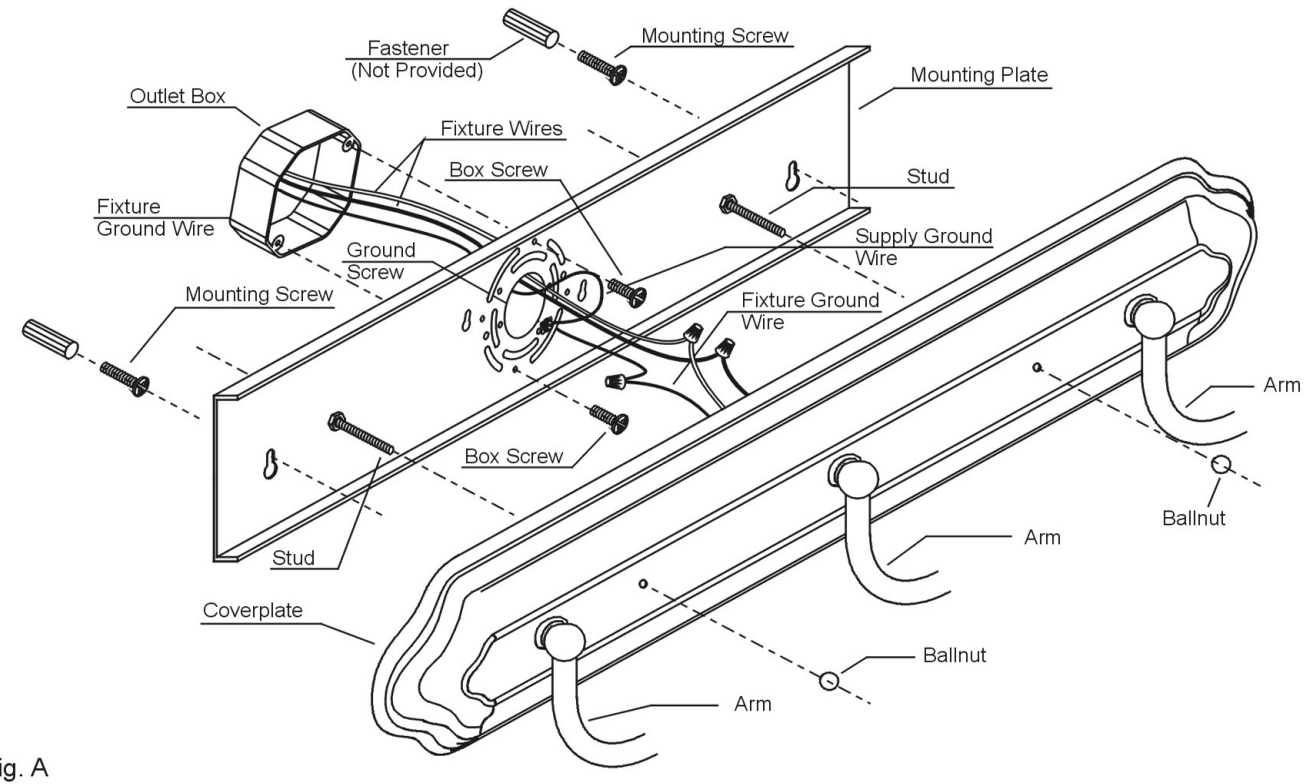

Fig. A

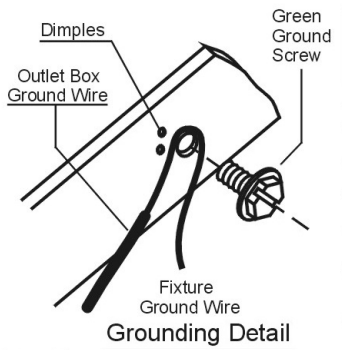

Grounding Detail

Fig. B

Connect Black or Red House Wire to:	Connect White House Wire to:
Black	White
Parallel cord - SPT I & II (round & smooth)	Parallel cord - SPT I & II (square & ridged)
Clear, Brown, Gold or Black (without tracer)	Clear, Brown, Gold or Black (with tracer)
Insulated Wire (Other than GREEN) with copper conductor	Insulated Wire (Other than GREEN) with silver conductor

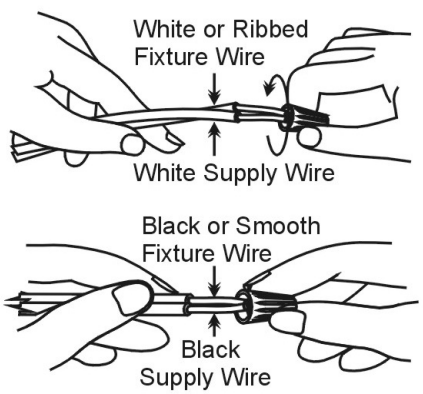

PO BOX 558/3325 GRASSY HILL RD. ROCKY MOUNT, VIRGINIA 24151
www.uttermost.com