AXOR Massaud
AXOR Massaud Single-Hole Faucet without Pop-Up, Tall, 1.2 GPM
Finishes : **chrome** Part no. : **18020001**

Description

Features

- Non-aerated stream
- Flow: 1.2 GPM (4.5 L/Min)
- Joystick ceramic cartridge

Item details

Technology

Eco Right

Comfort Zone

Design awards

if product design award 2006

DESIGNPREIS 2007 NOMINEE

Compliance

ADA

UPC

MAP

Product image

Scale drawing

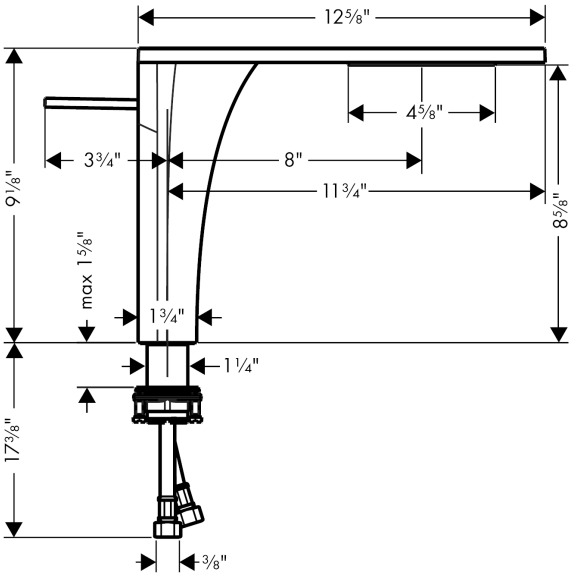

AXOR Massaud
AXOR Massaud Single-Hole Faucet without Pop-Up, Tall, 1.2 GPM
Finishes : **chrome** Part no. : **18020001**

Exploded drawing

Year of production: **>07/16**

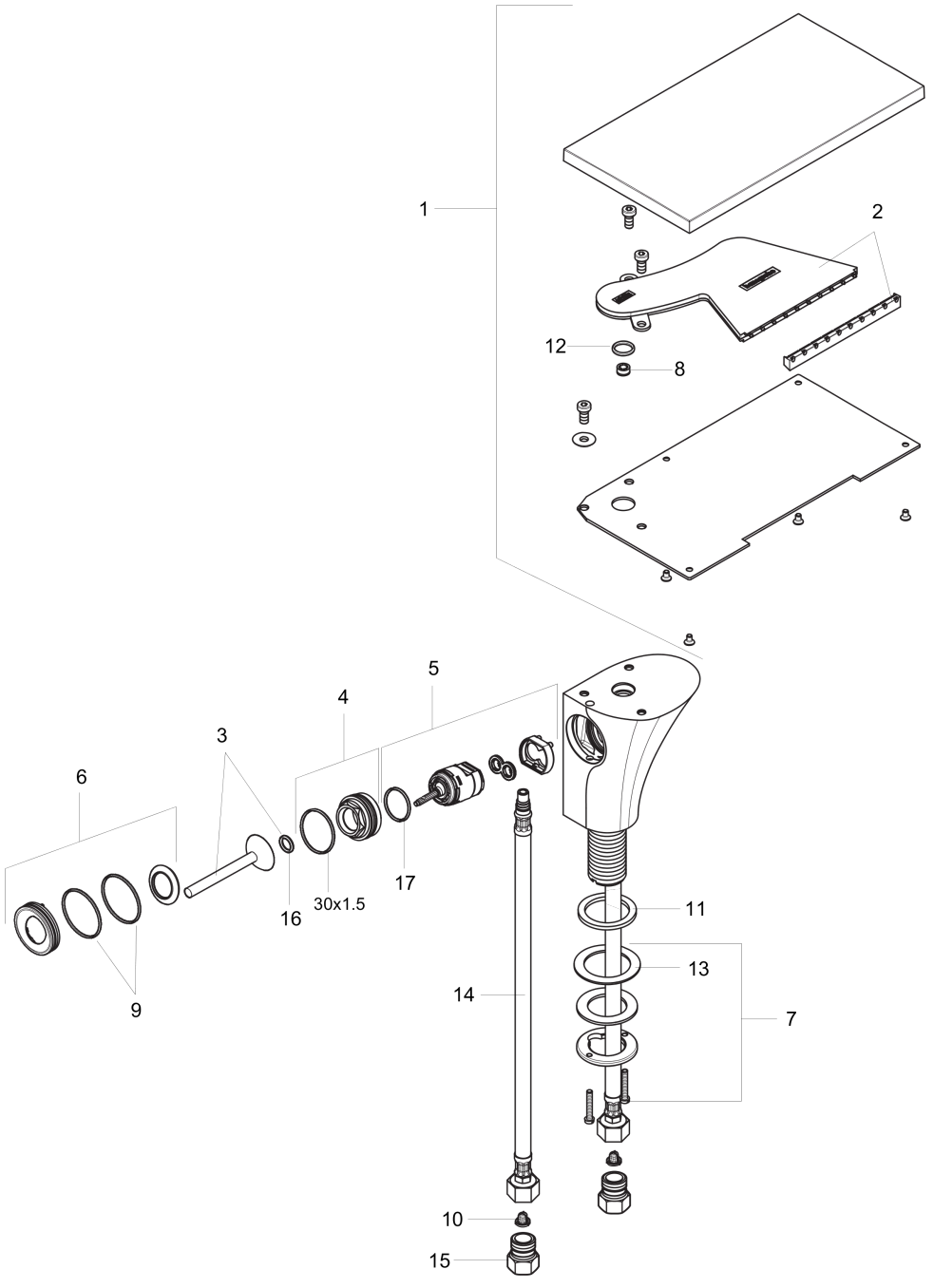

AXOR Massaud
AXOR Massaud Single-Hole Faucet without Pop-Up, Tall, 1.2 GPM
Finishes : **chrome** Part no. : **18020001**

Spare parts list

Year of production: **>07/16**

Pos.	Description	Part no.	Price	PU
1	spout cpl.	98652000	-	1
2	spray former	97445000	-	1
3	handle	92490000	-	1
4	nut	95667000	-	1
5	cartridge, assy	96339000	-	1
6	escutcheon	92989000	-	1
7	fixing set (Ø 32)	13961000	-	1
8	flow limiter (4 l/min)	98465000	-	1
9	O-ring 35x1,5	92114000	-	1
10	filter	97973000	-	1
11	flat seal	98749000	-	1
12	O-ring 12x2	98214000	-	1
13	lever collar	97548000	-	1
14	connection hose 23½" M8x0,75 3/8"	98600001	-	1
15	adapter for connection hose	95576001	-	1
16	O-ring 21,95x1,78	95169000	-	1
17	O-ring 9x2	98119000	-	1
a	fixation extension 35 mm	13898000	-	1