hansgrohe

AXOR Montreux
AXOR Montreux Showerpipe, 2.0 GPM
Finishes : **chrome** Part no. : **16572001**

Description

Features

- Flow: 2.0 GPM (7.6 L/Min)
- Outlets may not be operated simultaneously
- Shower outlet flow: 2.0 GPM (7.6 L/min)
- Anti-scald 100° safety stop
- Integrated volume controls
- Exposed installation
- Thermostatic cartridge

Item details

Technology

Air Power

Quick Clean

Compliance

ADA

MAP

WaterSense Meets EPA Criteria

UPC C ®

Product image

Scale drawing

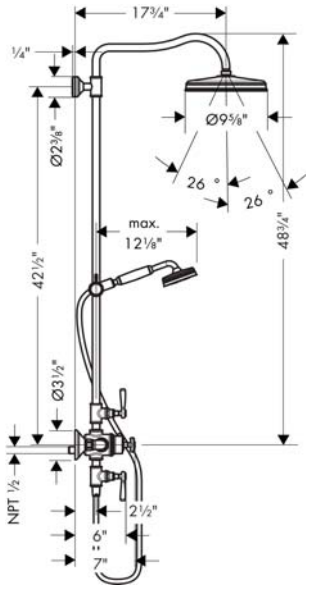

AXOR Montreux
AXOR Montreux Showerpipe, 2.0 GPM
Finishes : **chrome** Part no. : **16572001**

Exploded drawing

Year of production: **>01/18**

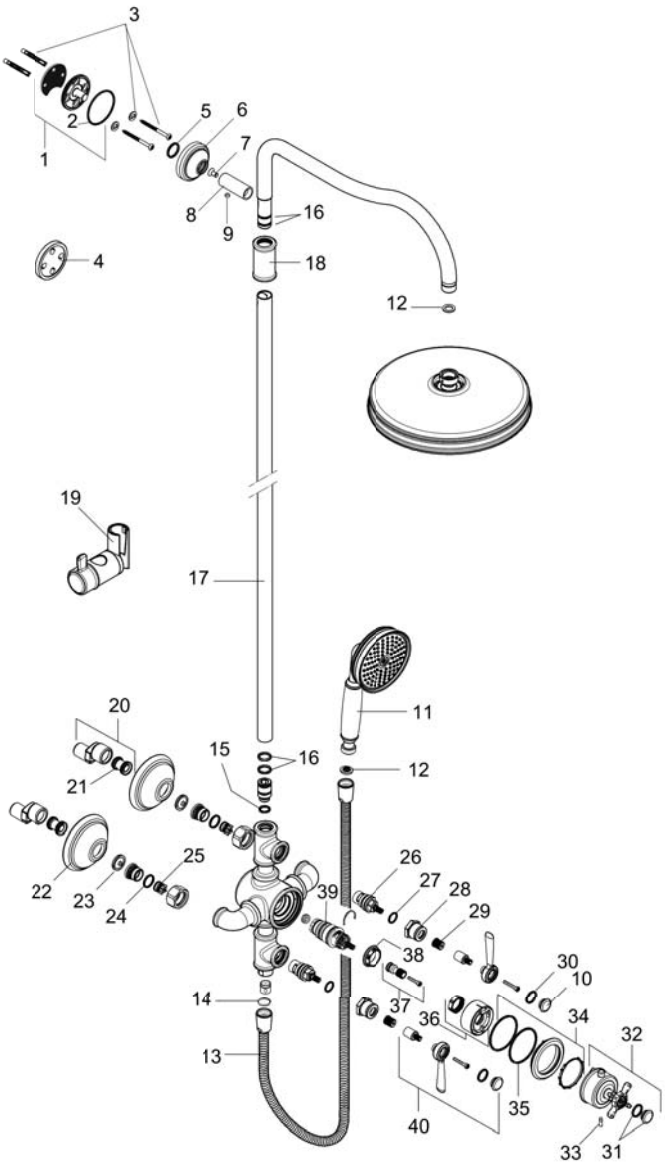

AXOR Montreux
AXOR Montreux Showerpipe, 2.0 GPM
Finishes : **chrome** Part no. : **16572001**

Spare parts list

Year of production: **>01/18**

Pos.	Description	Part no.	Price	PU
1	wall flange	95688000	-	1
2	O-Ring 50x2	98187000	-	1
3	mounting set	96179000	-	1
4	tile-matching-disk	95239000	-	1
5	O-ring 20x2	98165000	-	1
6	escutcheon Ø 60 mm	92982000	-	1
7	screw	92137000	-	1
8	sleeve	92166000	-	1
9	hollow set screw M6x5	98447000	-	1
10	set of screw covers	93182000	-	1
11	handshower	16320000	-	1
12	filter packing	94246000	-	1
13	shower hose 1,60 m	28116000	-	1
14	seal	98058000	-	1
15	O-ring 12x2,25	98382000	-	1
16	O-ring 15x2,5	98131000	-	1
17	pipe 973 mm	92468000	-	1
18	sleeve	92983000	-	1
19	support, assy	98723000	-	1
20	set of S-unions (±32 mm)	98592000	-	1
21	noise reduction	96429000	-	1
22	escutcheon	98595000	-	1
23	filter packing	96922000	-	1
24	O-ring 17x1,5	98137000	-	1
25	non return valve	96737000	-	1
26	shut off unit right closing	94009000	-	1
27	O-ring 14x1,78	92984000	-	1
28	sleeve	92712000	-	1
29	adapter for handle	92375000	-	1
30	O-ring 16x2	98133000	-	1
31	set of screw covers, cold / hot water / neutral	97987000	-	1
32	handle for thermostat	16594000	-	1
33	hollow set screw M5x16	97666000	-	1
34	deco-ring	92985000	-	1
35	O-ring 48x2,5	92987000	-	1
36	sleeve	92986000	-	1
37	adapter for handle	96435000	-	1
38	nut	98913000	-	1
39	thermostat cartridge	98282001	-	1
40	handle	92705000	-	1