CONCETTO
DESIGN + ENGINEERING
GROHE GERMANY

99.0504.031/ÄM 234564/09.16

www.grohe.com

Pure Freude an Wasser

GROHE

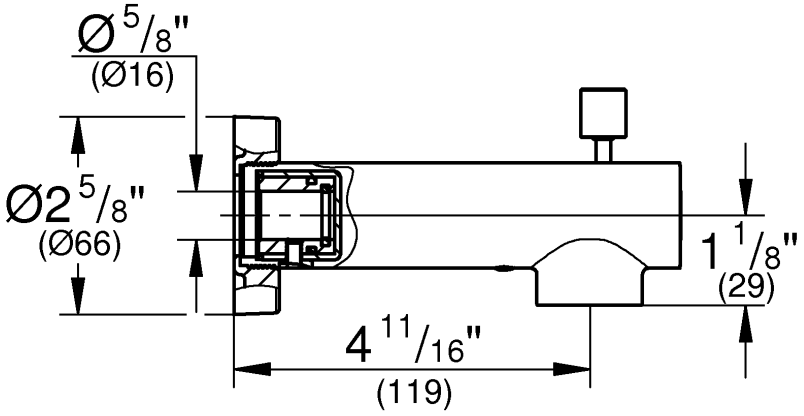

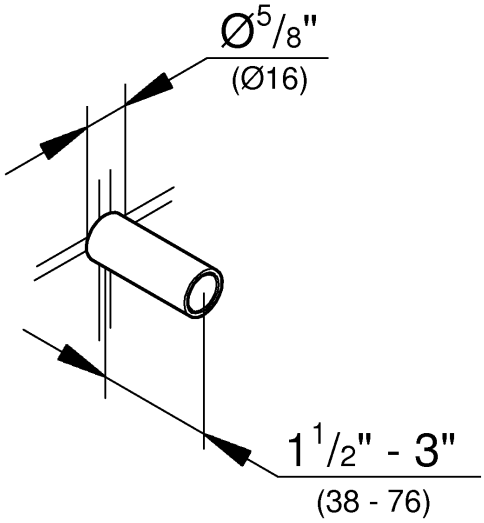

1.

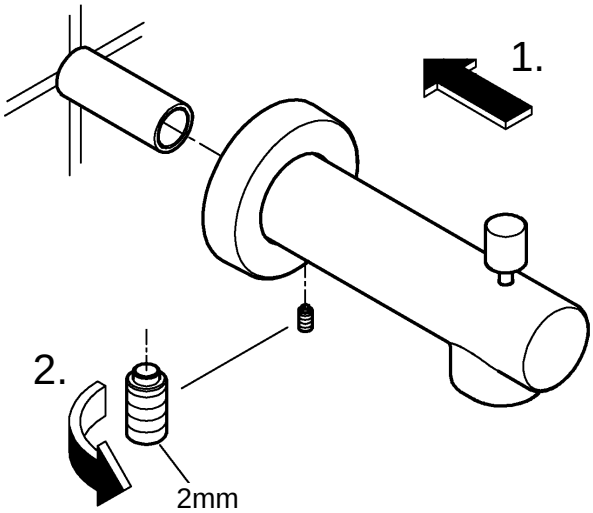

2.

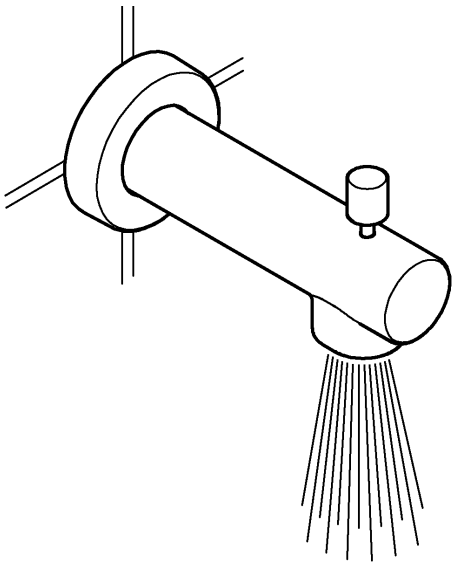

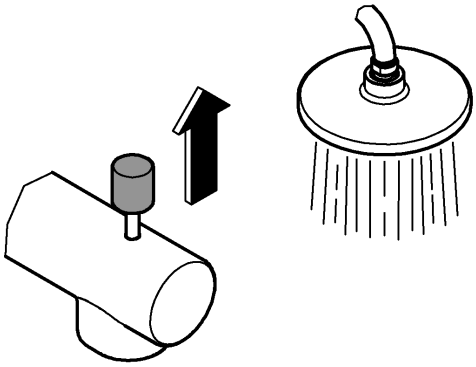

3.