NOTES:

1. FIT / FORM / FUNCTION SHALL FOLLOW PS-E.008.

2. APPLY 50-60 LB-IN OF TORQUE.

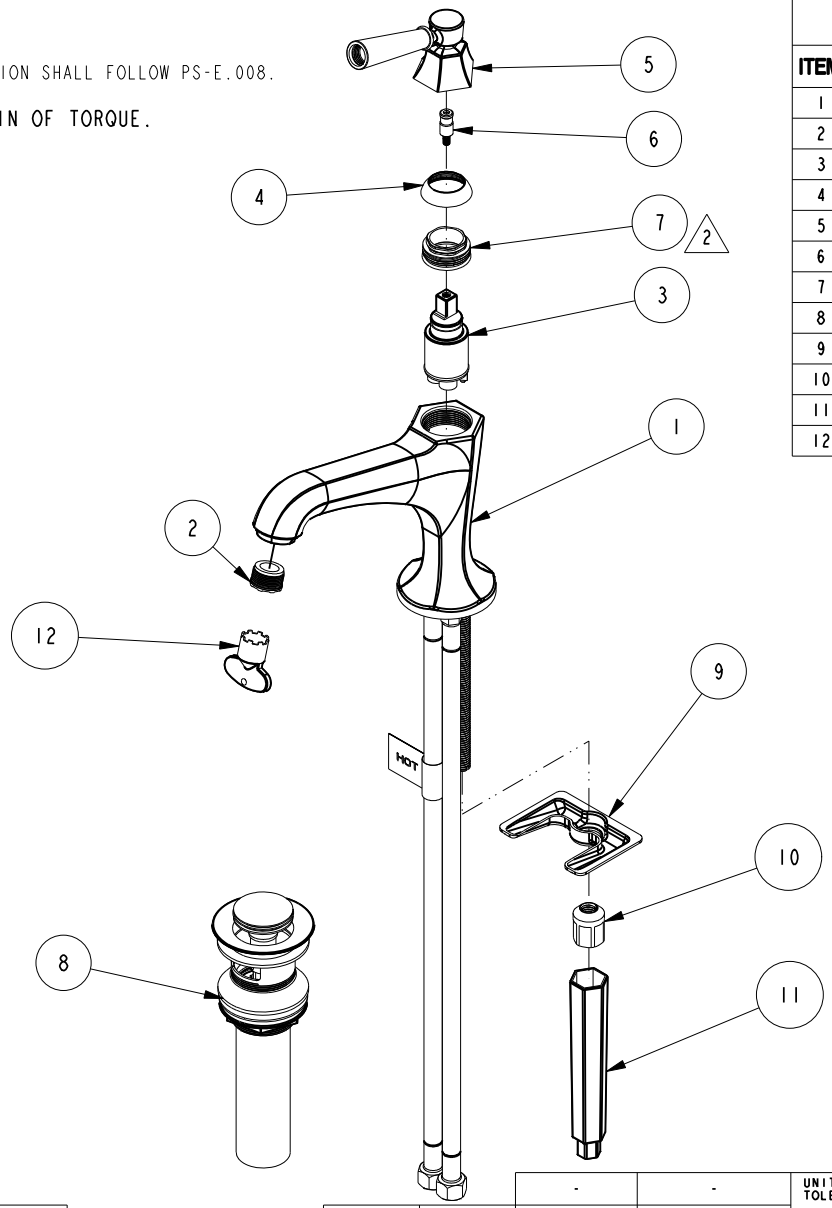

BILL OF MATERIAL (CURRENT LEVEL)

ITEM	PT/ASSY	DESCRIPTION	TYPE	QTY.
1	2-823	SPOUT BODY ASM	ASSEMBLY	1
2	12407	CACHE AERATOR INSERT, TINY Jr. SIZE, 1.2 GPM	PART	1
3	1-259	MIXING VALVE - FX25	ASSEMBLY	1
4	12034	DECORATIVE CAP	PART	1
5	2-819	LEVER ASM	ASSEMBLY	1
6	12005	STEM ADAPTOR	PART	1
7	1-275	CARTRIDGE RETAINER ASSEMBLY	ASSEMBLY	1
8	330	DRAIN, PUSH DOWN, W/ OVERFLOW	ASSEMBLY	1
9	11280	MOUNTING BRACKET	PART	1
10	11285	MOUNTING NUT	PART	1
11	92297	INSTALLATION TOOL, WRENCH	PART	1
12	91571	AERATOR KEY	PART	1

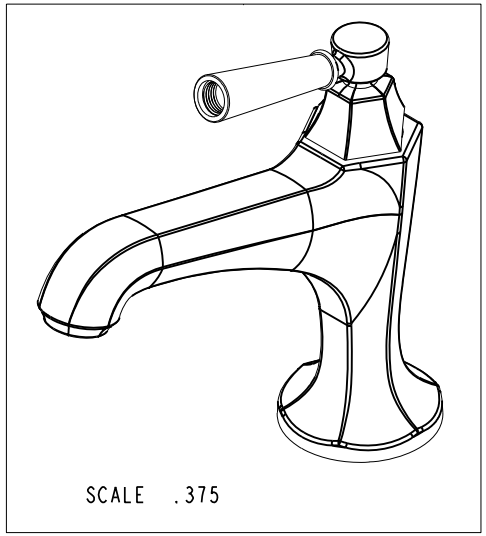

Cesar Gayosso

Digitally signed by Cesar Gayosso
DN: cn=Cesar Gayosso, o, ou, email=cgayosso@brasstech.com, c=US
Date: 2018.10.01 09:48:11 -07'00'

ZONE	REV	DESCRIPTION	DATE	APPROVED
-	D	EN-3718	10/01/18	C.G.
-	C	EN-3601	05/07/18	V.V.
-	B	EN-2896c	05/24/16	J.A
-	A	EN-2643	01/15/16	J.M
-	-	EN-1883	04/11/12	-

COPYRIGHT 2005 BRASSTECH, INC. THESE DRAWINGS AND THE DESIGNS DEPICTED HEREIN ARE THE PROPRIETARY PROPERTY OF BRASSTECH. ANY USE OR REPRODUCTION IS SUBJECT TO THE EXPRESS APPROVAL OF BRASSTECH. UNAUTHORIZED USE IS STRICTLY PROHIBITED. ALL RIGHTS RESERVED.

TESTING	-	-	-
ASSEMBLY	-	-	-
PLATING	-	-	-
POLISHING	-	NEXT ASSY	USED ON
MACHINING	-	APPLICATION	
TOOLING FIXTURE #		REMOVE ALL BURRS AND SHARP EDGES	

UNITS ARE: INCHES [MM]
TOLERANCES ARE:

FRACTIONS	DECIMALS	ANGLES
±1/16"	.X ±.1 [2,5]	±1°
	.XX ±.06 [1,5]	

(X.XXX) DENOTES CRITICAL DIMS.
ALL THREADS ARE CRITICAL

DRAWN	AMARISH	05/24/16
CHECKED	JINSON	05/24/16
APPROVED	J.A	05/24/16

BRASSTECH INCORPORATED
2001 CARNEGIE AVE.
SANTA ANA, CA 92705
(949) 417-5207

SINGLE HOLE LAVATORY FAUCET

DWG NO.	REV
1203	D

SCALE .225 | REF. - | SHEET 1 OF 2

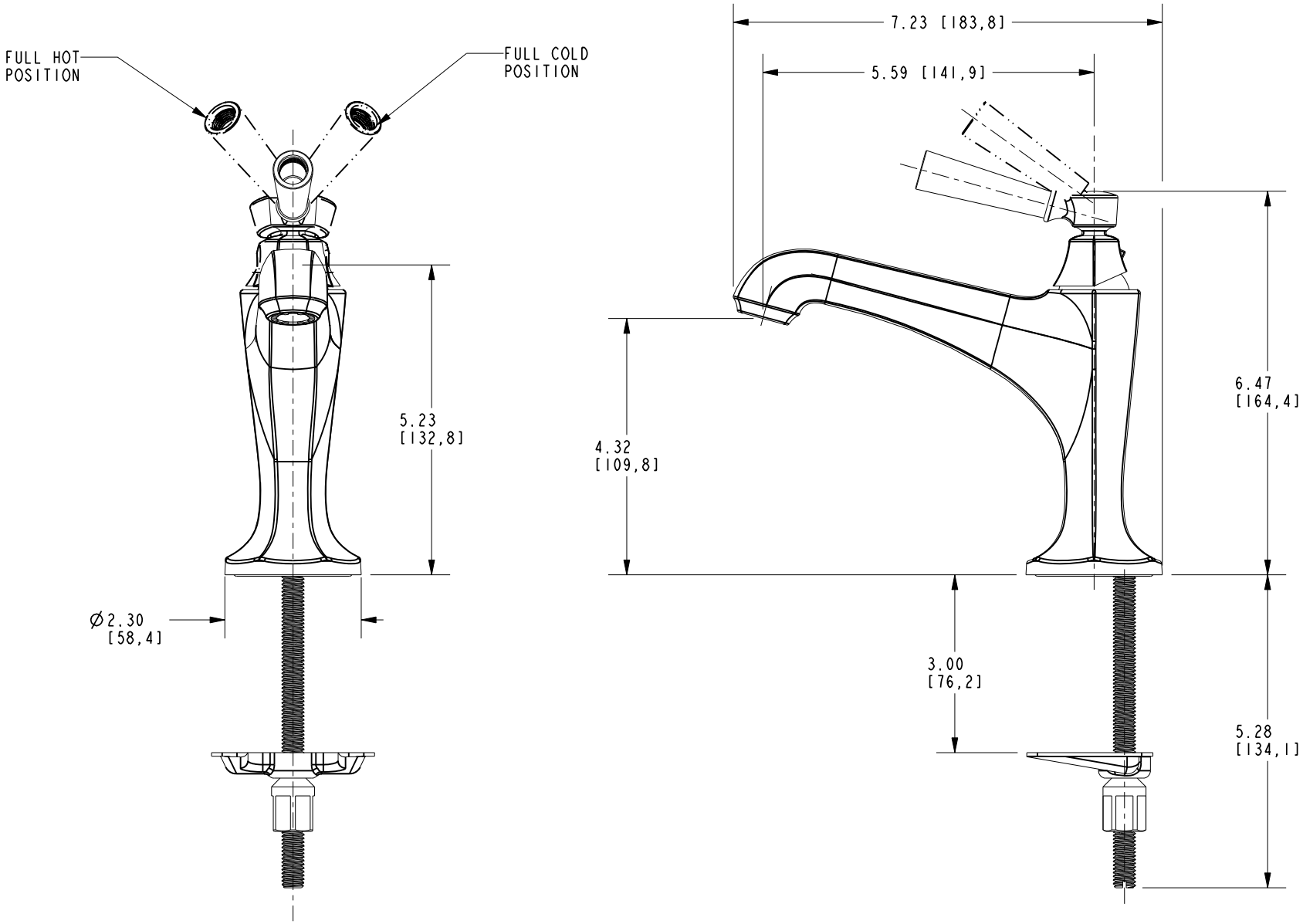

BRASSTECH INCORPORATED

2001 E. CARNEGIE AVE.
SANTA ANA, CA 92705
(949) 417-5207

DWG NO.	REV
1203	D

SCALE	REF.	SHEET
.400	-	2 OF 2