NOTES:

N1 1. FIT / FORM / FUNCTION SHALL FOLLOW PS-E.008.

2. PUT THESE ITEMS IN SEPARATE PLASTIC BAGS.

3. TORQUE TO 7.5-8.5 LB-FT.

4. APPLY THIN COAT OF SILICON GREASE FOR ALL O-RINGS BEFORE INSTALLATION.

5. APPLY LOCTITE 242, IF SCREW DOES NOT HAVE NYLON PATCH.

6. APPLY LOCTITE 680.

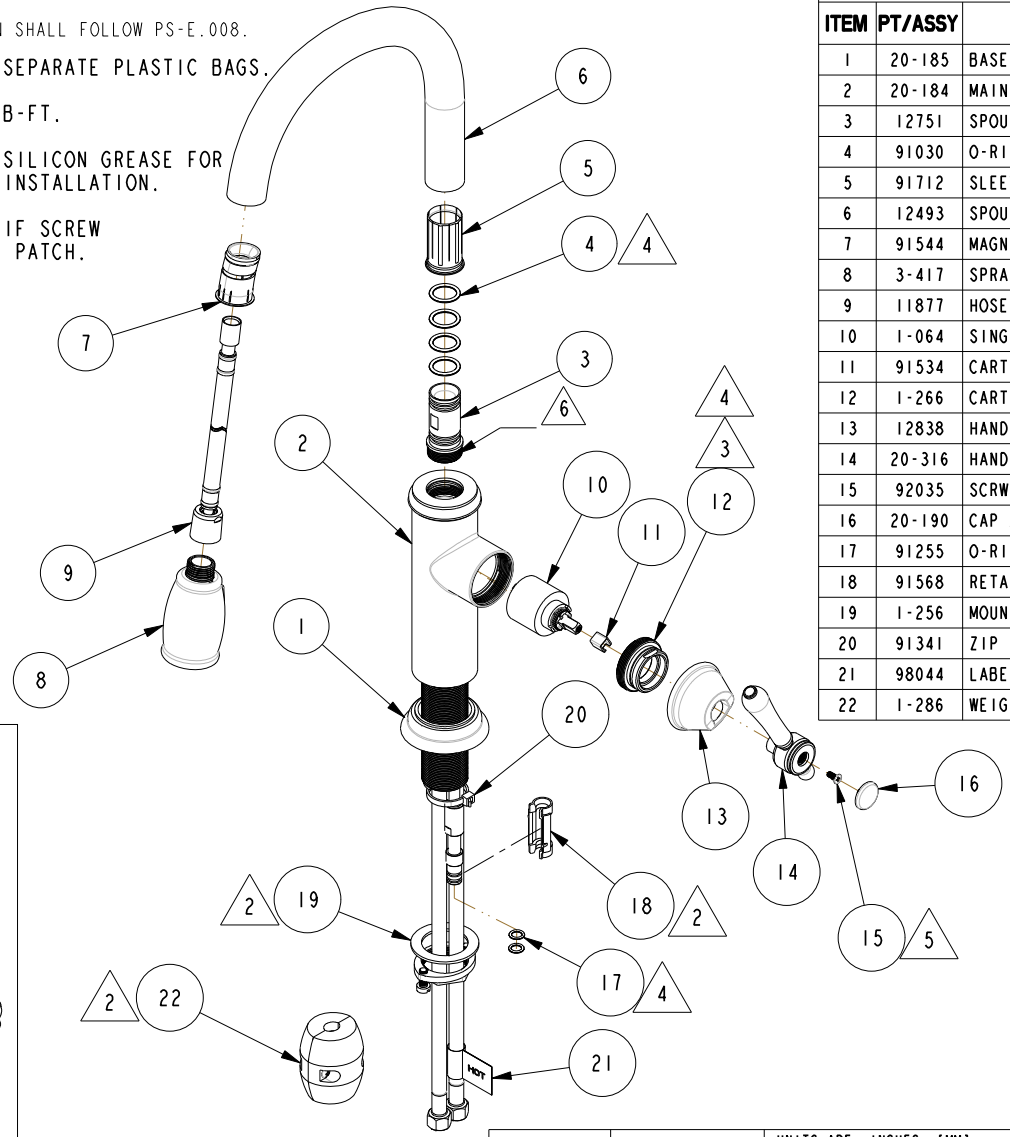

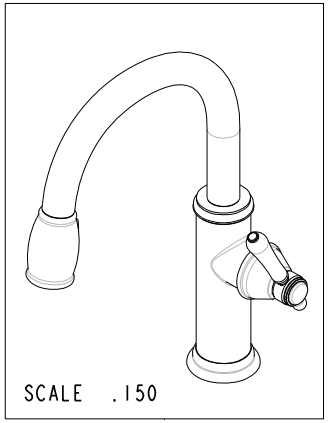

BILL OF MATERIAL (CURRENT LEVEL)

ITEM	PT/ASSY	DESCRIPTION	TYPE	QTY.
1	20-185	BASE RING ASM	ASSEMBLY	1
2	20-184	MAIN BODY ASM, CHESTERFIELD	ASSEMBLY	1
3	12751	SPOUT ADAPTER	PART	1
4	91030	O-RING, #2- 115, EPDM, 65-75 DURO, NSF 61	PART	4
5	91712	SLEEVE	PART	1
6	12493	SPOUT	PART	1
7	91544	MAGNET DOCKING	ASSEMBLY	1
8	3-417	SPRAY HEAD, JACOBEAN	ASSEMBLY	1
9	11877	HOSE, PULLDOWN SWIVEL	ASSEMBLY	1
10	1-064	SINGLE LEVER CARTRIDGE	PART	1
11	91534	CARTRIDGE STEM INSERT	PART	1
12	1-266	CART. RETAINER ASM	ASSEMBLY	1
13	12838	HANDLE HUB	PART	1
14	20-316	HANDLE LEVER ASM	ASSEMBLY	1
15	92035	SCRW, M4 X .7 X 10 PHL FLT HD SS	PART	1
16	20-190	CAP ASM	ASSEMBLY	1
17	91255	O-RING, #2- 011, EPDM, 65-75 DURO,NSF-61	PART	2
18	91568	RETAINER CLIP	PART	1
19	1-256	MOUNTING KIT	ASSEMBLY	1
20	91341	ZIP TIE	PART	1
21	98044	LABEL - HOT	PART	1
22	1-286	WEIGHT ASM	ASSEMBLY	1

Andy Nguyen

Digitally signed by Andy Nguyen
DN: cn=Andy Nguyen, o=Brasstech, Inc., ou=Product Engineer, email=anguyen@brasstech.com, c=US
Location: Santa Ana, CA 92705
Date: 2018.02.26 09:12:01 -08'00'

ZONE	REV	DESCRIPTION	DATE	APPROVED
-	D	EN-3413f	02/26/18	JM
-	C	EN-3413d	01/10/18	JM
-	B	EN-3034L	09/08/17	J.A
-	A	EN-3188	11/07/16	V.V.
-	-	EN-2980	09/30/16	V.V.

COPYRIGHT 2005 BRASSTECH, INC. THESE DRAWINGS AND THE DESIGNS DEPICTED HEREIN ARE THE PROPRIETARY PROPERTY OF BRASSTECH. ANY USE OR REPRODUCTION IS SUBJECT TO THE EXPRESS APPROVAL OF BRASSTECH. UNAUTHORIZED USE IS STRICTLY PROHIBITED. ALL RIGHTS RESERVED.

TESTING	-	-	-
ASSEMBLY	-	-	-
PLATING	-	-	-
POLISHING	-	NEXT ASSY	USED ON
MACHINING	-	APPLICATION	
TOOLING FIXTURE #		REMOVE ALL BURRS AND SHARP EDGES	

UNITS ARE: INCHES [MM]
TOLERANCES ARE:
FRACTIONS ±1/16" DECIMALS .X ±.1 [2,5] .XX ±.06 [1,5] ANGLES ±1°
(X.XXX) DENOTES CRITICAL DIMS.
ALL THREADS ARE CRITICAL

DRAWN	JINSON	02/02/18
CHECKED	A.N.	02/02/18
APPROVED	A.N.	02/02/18

BRASSTECH INCORPORATED
2001 CARNEGIE AVE.
SANTA ANA, CA 92705
(949) 417-5207

PREP/BAR PULL DOWN FAUCET

DWG NO. 1030-5223 REV D

SCALE .180 REF. - SHEET 1 OF 2

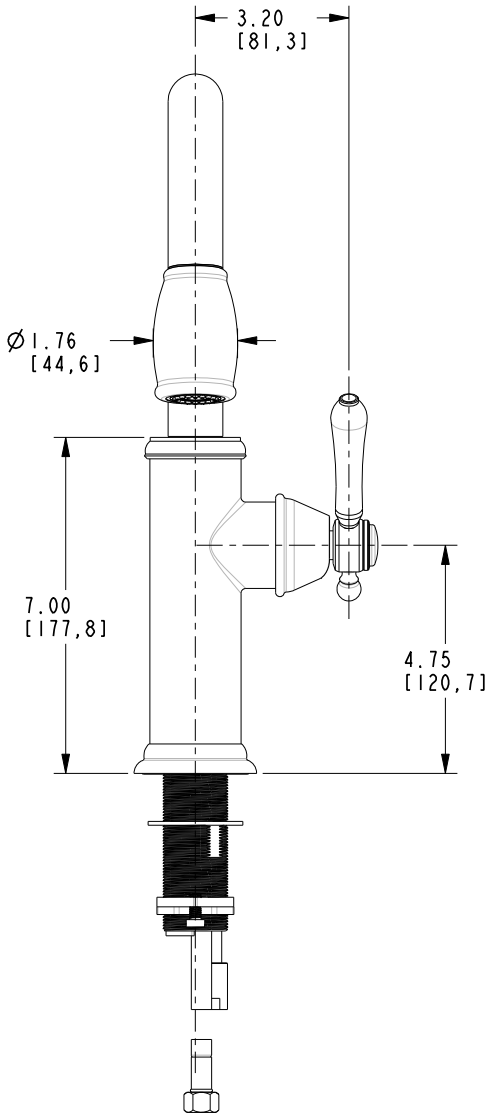

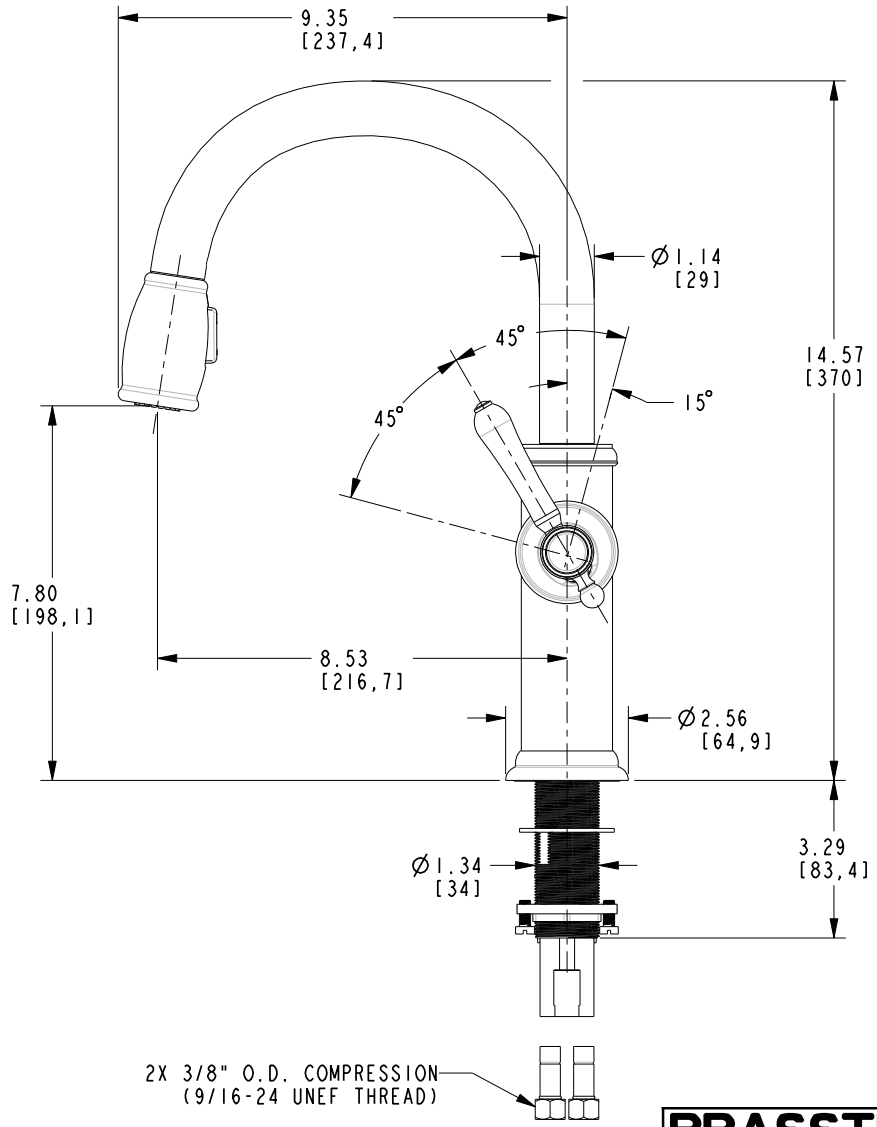

BRASSTECH INCORPORATED

2001 E. CARNEGIE AVE.
SANTA ANA, CA 92705
(949) 417-5207

DWG NO.	REV
1030-5223	D

SCALE	REF.	SHEET
.250	-	2 OF 2