NOTES:

(NI) 1. FIT / FORM / FUNCTION SHALL FOLLOW PS-E.008.

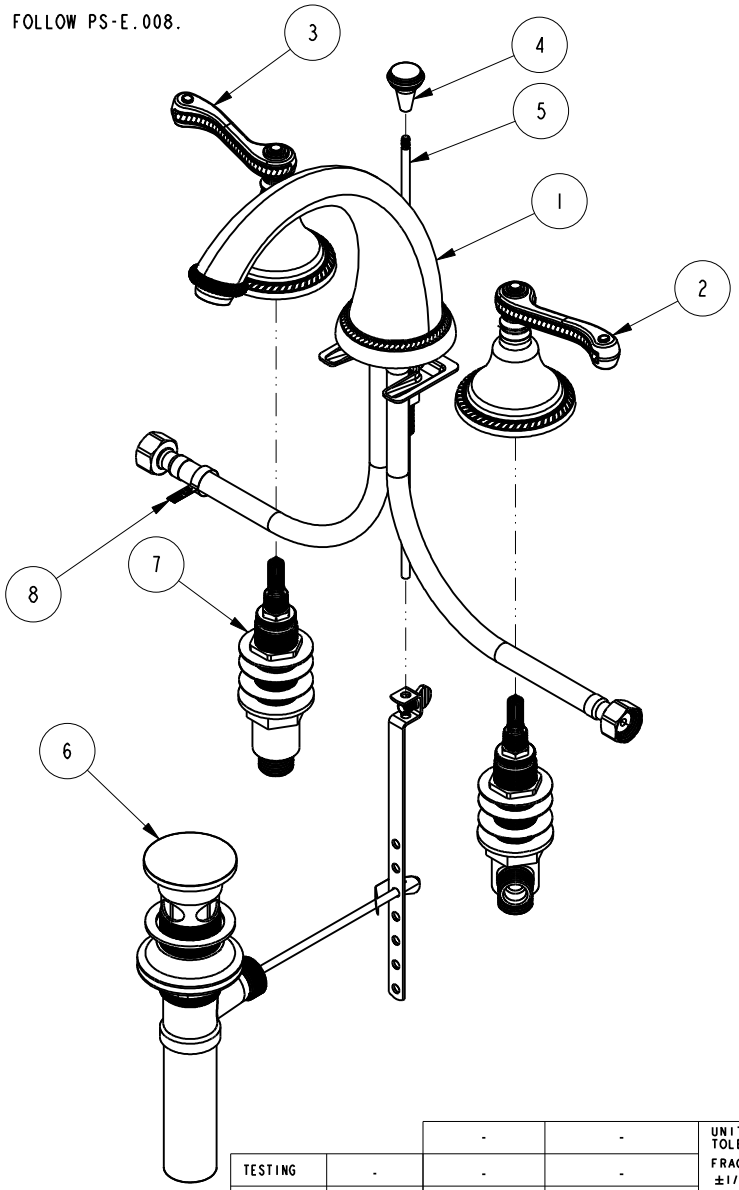

BILL OF MATERIAL (CURRENT LEVEL)

ITEM	PT/ASSY	DESCRIPTION	TYPE	QTY.
1	3-347	W/S SPOUT ASM	ASSEMBLY	1
2	3-188C	HANDLE ASM COLD	ASSEMBLY	1
3	3-188H	HANDLE ASM - HOT	ASSEMBLY	1
4	10021	POP-UP KNOB	PART	1
5	10288	3/16" POP UP ROD	PART	1
6	325	POP UP ASSEMBLY	ASSEMBLY	1
7	1-525_1020	W/S VALVE ASM	ASSEMBLY	1
8	98037_375_NIPPLE	STICKER LABEL A112.18.1	PART	1

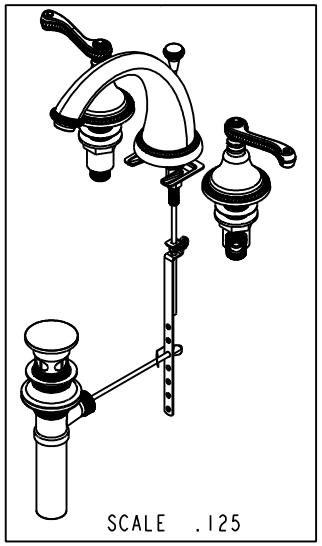

ZONE	REV	DESCRIPTION	DATE	APPROVED
-	C	EN-3371	08/04/17	J.M
-	B	EN-1616	09/13/10	-
-	A	EN-1018	06/10/08	-
-	-	RELEASE	2000	-

COPYRIGHT 2005 BRASSTECH, INC. THESE DRAWINGS AND THE DESIGNS DEPICTED HEREIN ARE THE PROPRIETARY PROPERTY OF BRASSTECH. ANY USE OR REPRODUCTION IS SUBJECT TO THE EXPRESS APPROVAL OF BRASSTECH. UNAUTHORIZED USE IS STRICTLY PROHIBITED. ALL RIGHTS RESERVED.

TESTING	-	-	-
ASSEMBLY	-	-	-
PLATING	-	-	-
POLISHING	-	NEXT ASSY	USED ON
MACHINING	-	APPLICATION	
TOOLING FIXTURE #		REMOVE ALL BURRS AND SHARP EDGES	

UNITS ARE: INCHES [MM]
TOLERANCES ARE:
FRACTIONS ±1/16" DECIMALS .X ±.1 [2.5] .XX ±.06 [1.5] ANGLES ±1°
(X.XXX) DENOTES CRITICAL DIMS.
ALL THREADS ARE CRITICAL

DRAWN	VINAY	08/04/17
CHECKED	RAVINDRA	08/04/17
APPROVED	J.M	08/04/17

BRASSTECH INCORPORATED
2001 CARNEGIE AVE.
SANTA ANA, CA 92705
(949) 417-5207

WIDESPREAD FAUCET

DWG NO. 1020 REV C

SCALE .220 REF. - SHEET 1 OF 2

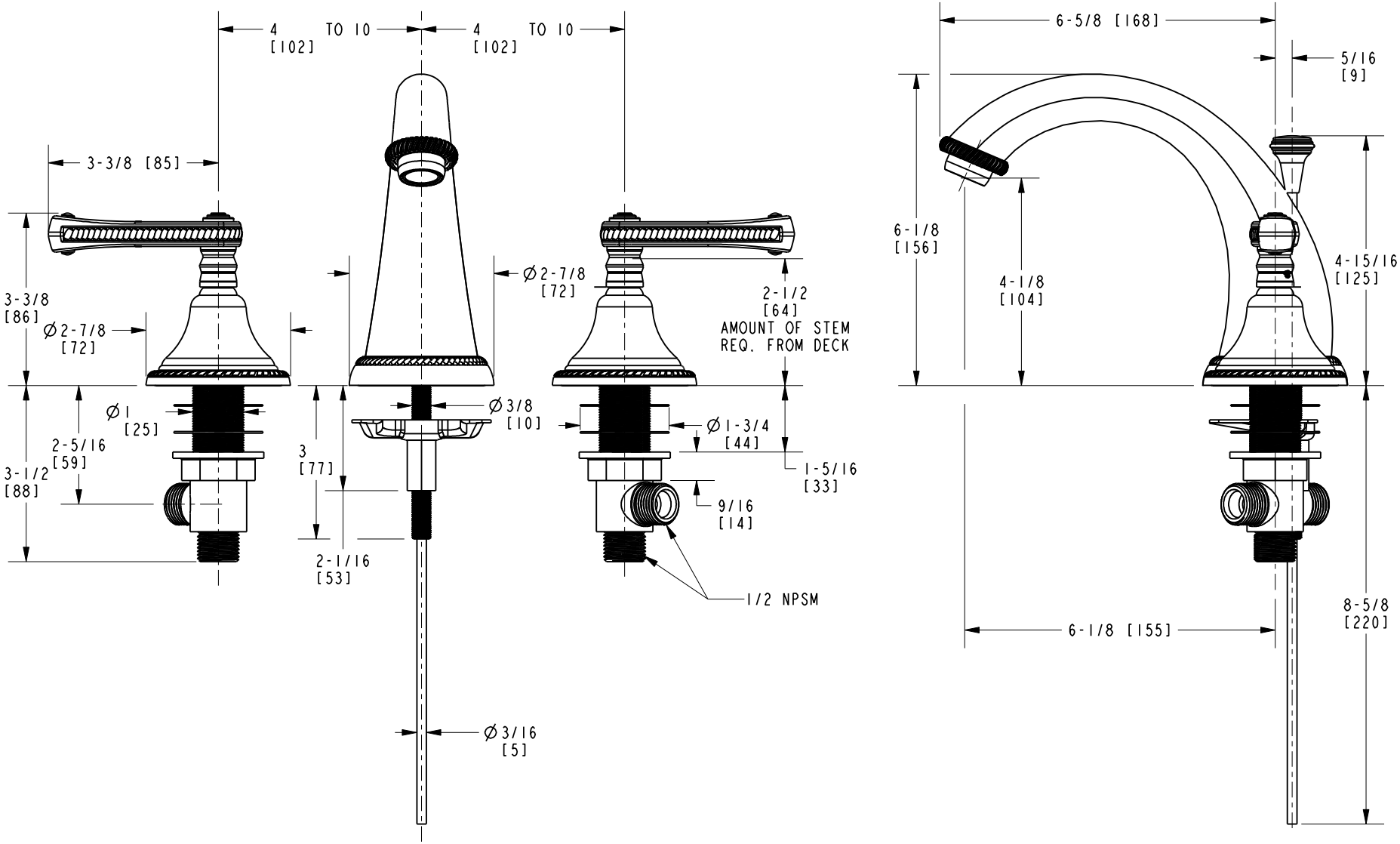

BRASSTECH INCORPORATED
2001 E. CARNEGIE AVE.
SANTA ANA, CA 92705
(949) 417-5207

DWG NO.	REV
1020	C

SCALE	REF.	SHEET
.350	-	2 OF 2