SPECIFICATION SHEET

ITEM TYPE	WALL SCONCE
WIDTH	6”(152MM)
HEIGHT	9”(228MM)
DEPTH	7”(178MM)
WEIGHT	2LBS (0.91KG)
LAMP	(1) MEDIUM
MAX WATTAGE	60W
FINISH	DARK RUST
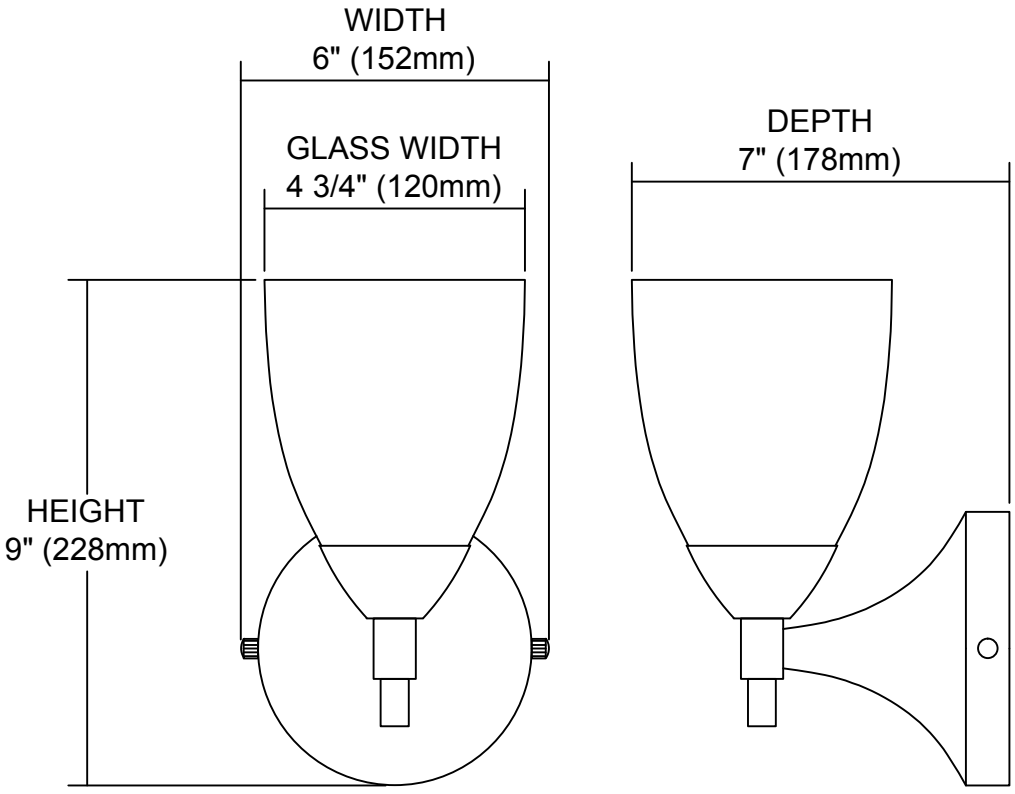
ITEM#:10150/1DR-CY